LIFT 50 TONS, WHAT DO YOU GET? SIMPLE, RESPECT

Mighty and reliable, Thern power winches can lift, hoist, pull or position up to 100,000 lb to handle any task you've got. Our broad range of standard models can be quickly adapted to suit custom applications. Plus our power winches feature top of the line gear reducers, rugged steel construction, load holding brake motors, and legendary performance and craftsmanship.

➤ *CUSTOMIZABLE*

We build to suit. Thern power winches come in a wide variety of base configurations, making it fast and affordable to customize a winch to your application.

➤ *DURABLE*

Thern's heavy duty power winches are built to take the around the clock punishment of hard working jobsites. Everything about them, from fabricated steel frame to industrial strength controls, says "no kid gloves" required.

➤ *EXPERIENCE*

Thern has the experienced people you rely on to get the right product for the job. Our unmatched know-how means you won't end up with a solution that only creates new problems.

Series 4WS

Series 4HS6-26M
Clutch model shown

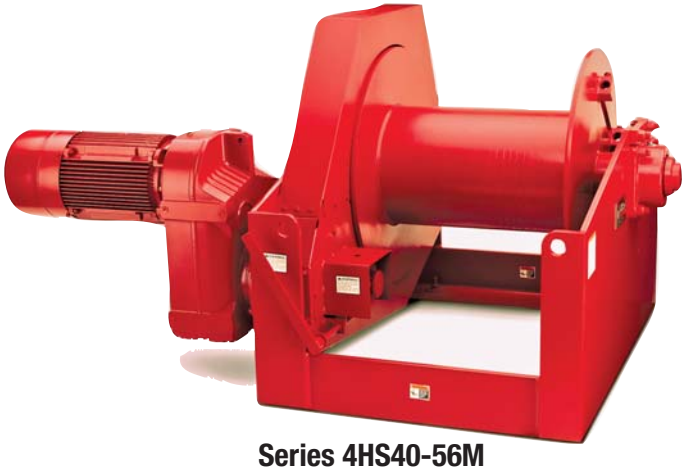

Series 4HS40-56M
Clutch model shown

THERN **www.thern.com** **1.800.843.7648**

Thern products are not for lifting people or things over people.

ONE IF BY LAND, THERN IF BY SEA

Just because something floats, doesn't mean it isn't heavy. Try raising and lowering accommodation ladders, launching deep water research equipment or towing a vessel. It takes strength, control and stamina.

It takes a Thern heavy duty power winch.

A MINER'S BEST FRIEND

Hard, heavy, dirty. That's everything you need to know about mining. Conditions are poor, mechanical strain constant, and loads a bear, but Thern power winches can handle any task you find in a mine.

WHEN IT COMES TO HANDLING, THERE'S BULK AND THERE'S BULK

Thern power winches are used to pull trains, position barges, or lift behemoth conveyors. Why? They have the muscle and endurance to do it over the long haul without failure.

POWERFUL ENOUGH FOR POWER PLANTS

Everything about a power plant is big – from steel doors to flare stacks, and it all needs to be lifted, lowered, or positioned. Durable and easily customized, Thern power winches help keep power plants running.

Series 4HWF

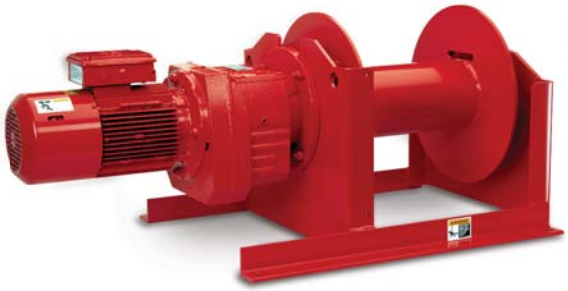

Series 4HPF

Series 4HPFC

Clutch model shown

4WS SERIES

Thern 4WS series power winches feature dual stage gear reduction for economical handling of large loads. The combination of helical/worm and spur gearing make these winches ideal for applications requiring secure load control and accurate positioning. Our modular design also means we can quickly customize these winches to meet your specific requirements.

FLANGE MOUNTED MOTOR is a 230/460 volt 3 phase motor, 60 cycle, IP 54[1], TEFC severe duty, reversible, class B or F insulated, continuous duty brakemotor.

Standard motors comply with relevant standards including NEMA, MG1, ANSI, CSA, IEC[1] and ABS.

LOAD HOLDING MOTOR DISC BRAKE is spring set, electrically released for positive load control.

DUAL STAGE GEARING, comprised of a worm or helical/worm and spur gears, make winches well suited for applications requiring secure load control and accurate positioning.

The heat treated worm or helical/worm gear set provides improved durability and operates in an oil bath, enclosed in a high strength cast iron gearcase, SAE class 30. Double-lip oil seals keep oil in and contaminants out. Large capacity bearings ensure long life. Speed reducers meet AGMA standards.

Guarded, heat treated spur gearing provides secondary reduction. Grease zerks allow for easy lubrication.

FLANGE STYLE ROLLER BEARINGS are self-aligning bearings with cast housing to maintain smooth drum rotation.

WELDED STEEL DRUM with outside flange anchors allow for uniform winding and help extend life of wire rope. Anchors allow cable to be over wound or under wound from either side of the drum.

EXTENDED STEEL DRUM SHAFT with both ends captured in fabricated steel frame for optimal strength and security.

WIRE ROPE ASSEMBLIES sold separately per customer request.

ANSI B30.7 COMPLIANCE is available. Please contact the factory.

2 YEAR "MOVE IT WITH CONFIDENCE" LIMITED WARRANTY leads the industry.

[1]Does not apply to 4WS9M18 Series winches.

	HP	Load Rating	Line Speed
4WS9M18	5 - 10	7,000 - 10,000 lb	10 - 30 fpm
4WS16M20	7.5 - 15	13,000 - 16,000 lb	15 - 35 fpm
4WS26M26	15 - 25	22,000 - 26,000 lb	10 - 35 fpm

OPTIONS AND ACCESSORIES

DRUM MODIFICATIONS (A) include grooved drums, multiple compartment drums and modified drum widths and diameters.

WINCH MOUNTING OPTIONS include base, wall or under hung installation.

CABLE PRESSURE BARS (B) help maintain uniform winding of wire rope.

LIMIT SWITCHES (A) provide secondary shut-off for load travel in one or two directions.

MOTOR OPTIONS include air or hydraulic, voltage or phase changes, IP 55 or 65, class F or H insulated and multi-speed operation.

DUTY RATINGS include IEEE 45 marine duty, tropical duty, severe duty and explosion proof ratings.

BRAKE OPTIONS include over-speed, caliper style, band, and more.

CONTROLS (C) are available in a wide range of standard and custom configurations for single or variable speed.

CORROSION RESISTANT FINISHES (D) for harsh or hazardous environments.

MANUAL OVERRIDES for winch operation in power loss situations.

A

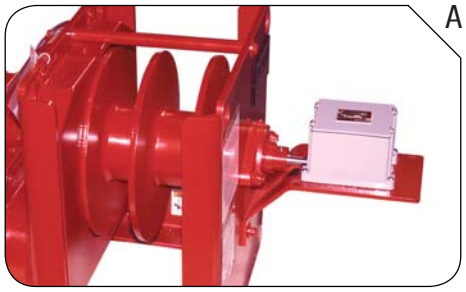

Shown with double compartment and narrow drum width modifications and rotary limit switch.

B

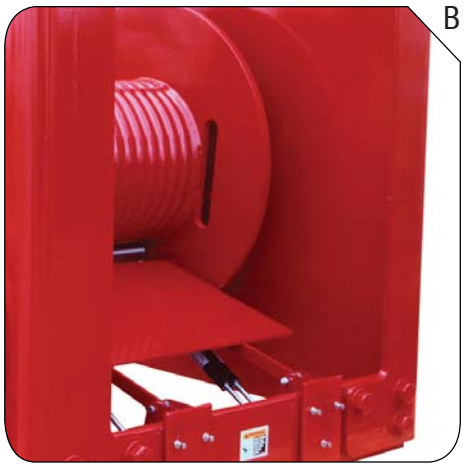

Shown with cable pressure bar and grooved drum modification.

D

Shown with grooved drum modification and gray epoxy finish.

C

4WS SERIES POWER WINCHES

4WS Series Performance Characteristics

	Model Number Extensions			Motor hp	Load Rating						Line Speed			
	Load Rating	Line Speed	Motor Codes[1]	hp	[1]st Layer		Mid Drum		Full Drum		[1]st Layer		Full Drum	
	(lb)	(fpm)			(lb)	(kg)	(lb)	(kg)	(lb)	(kg)	(fpm)	(mpm)	(fpm)	(mpm)
4WS9M18	7000	20	D,E,F	5	7,300	3,312	5,000	2,268	3,800	1,724	21	6.4	41	12.5
4WS9M18	7000	30	D,E,F	7.5	7,500	3,402	5,200	2,359	4,000	1,815	32	9.8	61	18.6
4WS9M18	10000	10	D,E,F	5	10,000	4,536	6,900	3,130	5,300	2,405	13	4.0	24	7.3
4WS9M18	10000	20	D,E,F	7.5	10,000	4,536	6,900	3,130	5,300	2,405	21	6.4	41	12.5
4WS9M18	10000	30	D,E,F	10	10,000	4,536	6,900	3,130	5,200	2,359	32	9.8	61	18.6
4WS16M20	13000	15	D,E,F	7.5	13,000	5,897	8,800	3,992	6,700	3,040	14	4.3	26	7.9
4WS16M20	13000	20	D,E,F	10	13,300	6,033	9,100	4,128	6,900	3,130	18	5.5	35	10.7
4WS16M20	13000	35	D,E,F	15	13,000	5,897	8,900	4,038	6,700	3,040	35	10.7	68	20.7
4WS16M20	16000	15	D,E,F	7.5	16,000	7,258	11,100	5,035	8,500	3,856	12	3.7	24	7.3
4WS16M20	16000	20	D,E,F	10	16,000	7,258	11,100	5,035	8,500	3,856	16	4.9	31	9.4
4WS26M26	22000	20	D,E,F	15	22,800	10,343	16,700	7,576	13,200	5,988	18	5.5	31	9.4
4WS26M26	22000	25	D,E,F	20	22,600	10,252	16,500	7,485	13,100	5,943	25	7.6	43	13.1
4WS26M26	22000	35	D,E,F	25	22,200	10,070	16,300	7,394	12,900	5,852	36	11.0	63	19.2
4WS26M26	26000	10	D,E,F	10	26,200	11,885	19,400	8,800	15,400	6,986	10	3.0	17	5.2
4WS26M26	26000	15	D,E,F	15	26,000	11,794	20,200	9,163	16,500	7,485	16	4.9	27	8.2

Please contact factory or nearest Thern Distributor for firm fixed price and delivery.

[1]

Motor Codes		
D	230 volt	3 phase
E	460 volt	3 phase
F	All other voltages please contact factory	

4WS Series Drum Capacities

Wire Rope Dia.		Breaking Strength[2]		Drum Capacity	4WS9M18		4WS16M20		4WS26M26	
(in)	(mm)	(lb)	(kg)		(ft)	(m)	(ft)	(m)	(ft)	(m)
7/16	11.2	20,400	9,254	1st	87	26.5	–	–	–	–
				Mid	670	204.2	–	–	–	–
				Full	1,500	457.2	–	–	–	–
1/2	12.7	26,600	12,066	1st	76	23.2	–	–	–	–
				Mid	520	158.5	–	–	–	–
				Full	1,170	356.6	–	–	–	–
9/16	14.2	33,600	15,240	1st	67	20.4	89	27.1	–	–
				Mid	420	128.0	690	210.3	–	–
				Full	930	283.5	1,530	466.3	–	–
5/8	16.0	41,200	18,688	1st	59	18.0	78	23.8	–	–
				Mid	340	103.6	560	170.7	–	–
				Full	760	231.6	1,250	381.0	–	–
3/4	19.1	58,800	26,671	1st	48	14.6	65	19.8	110	33.5
				Mid	240	73.2	400	121.9	670	204.2
				Full	540	164.6	880	268.2	1,480	451.1
7/8	22.4	79,600	36,106	1st	–	–	54	16.5	94	28.7
				Mid	–	–	290	88.4	480	146.3
				Full	–	–	640	195.1	1,070	326.1
1	25.4	103,400	46,902	1st	–	–	47	14.3	82	25.0
				Mid	–	–	220	67.1	370	112.8
				Full	–	–	490	149.4	830	253.0
1-1/8	28.7	130,000	58,968	1st	–	–	–	–	71	21.6
				Mid	–	–	–	–	300	91.4
				Full	–	–	–	–	660	201.2
1-1/4	31.8	159,800	72,485	1st	–	–	–	–	63	19.2
				Mid	–	–	–	–	240	73.2
				Full	–	–	–	–	530	161.5
1-3/8	34.9	192,000	87,090	1st	–	–	–	–	56	17.1
				Mid	–	–	–	–	200	61.0
				Full	–	–	–	–	440	134.1

Values based on 6x37 IWRC EIPS wire rope.

Actual drum capacities 25-30% less, due to nonuniform winding. Wire rope tension will also affect drum capacity.

[2] Wire rope should be selected based on the breaking strength to load rating ratio and application parameters. Industry standards suggest a 5:1 breaking strength to load rating ratio for lifting and a 3:1 ratio for pulling.

Electric Motor Controls

	Description	Approx. Ship Wt.	
		(lb)	(kg)
10S3D4	electric motor controls 230/3/60 to 3 hp	25	12
10S7D4	electric motor controls 230/3/60 to 7.5 hp	25	12
10S10D4	electric motor controls 230/3/60 to 10 hp	28	13
10S20D4	electric motor controls 230/3/60 to 20 hp	28	13
10S30D4	electric motor controls 230/3/60 to 30 hp	60	28
10S7E4	electric motor controls 460/3/60 to 7.5 hp	25	12
10S15E4	electric motor controls 460/3/60 to 15 hp	25	12
10S20E4	electric motor controls 460/3/60 to 20 hp	28	13
10S40E4	electric motor controls 460/3/60 to 40 hp	60	28

Controls include NEMA 4 rated enclosure, and NEMA 4x rated pendant control on 50 foot cord.

Motor Controls sold separately.

Please contact factory or nearest Thern Distributor for firm fixed price and delivery.

All prices include mounting and wiring to motor.

4WS Series Drum Dimensions

	Drum Diameter (ID)		Flange Diameter (OD)		Drum Width (W)		Fleet Angle Dist (A)[3]	
	(in)	(mm)	(in)	(mm)	(in)	(mm)	(ft)	(m)
4WS9M18	9.00	229	20.00	508	18.00	457	29	8.8
4WS16M20	10.75	273	24.00	610	20.00	508	32	9.8
4WS26M26	14.00	356	28.00	711	26.00	660	42	12.8

[3] Recommended minimum distance between drum and lead sheave for smooth drum. Dimensions are for reference only and subject to change without notice. Please contact factory for exact dimensions.

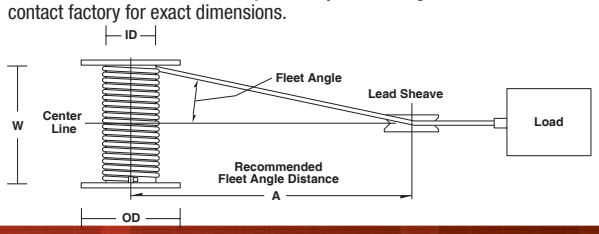

4WS Series

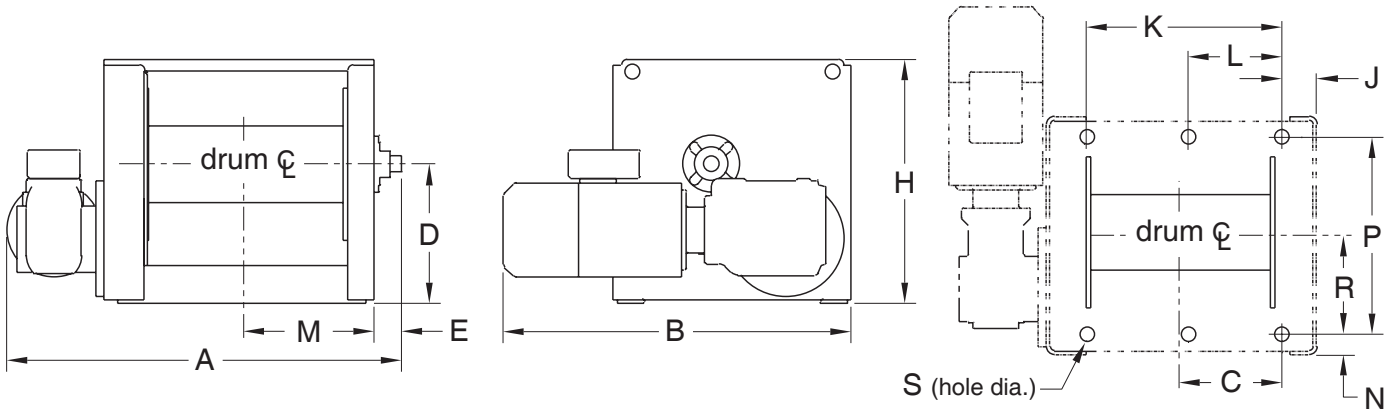

4WS Series Winch Dimensions

	A		B		C		D		E		H		J		K	
	(in)	(mm)	(in)	(mm)	(in)	(mm)	(in)	(mm)	(in)	(mm)	(in)	(mm)	(in)	(mm)	(in)	(mm)
4WS9M18-7000-20	44.00	1,118	33.75	857	8.50	216	17.75	451	5.13	130	31.00	787	4.00	102	18.00	457
4WS9M18-7000-30	45.50	1,156	38.50	978	8.50	216	17.75	451	5.13	130	31.00	787	4.00	102	18.00	457
4WS9M18-10000-10	44.00	1,118	33.75	857	8.50	216	17.75	451	5.13	130	31.00	787	4.00	102	18.00	457
4WS9M18-10000-20	45.50	1,156	38.50	978	8.50	216	17.75	451	5.13	130	31.00	787	4.00	102	18.00	457
4WS9M18-10000-30	45.50	1,156	40.00	1,016	8.50	216	17.75	451	5.13	130	31.00	787	4.00	102	18.00	457
4WS16M20-13000-15	48.00	1,219	34.75	883	9.50	241	20.00	508	6.25	159	34.00	864	4.00	102	20.00	508
4WS16M20-13000-20	48.00	1,219	37.00	940	9.50	241	20.00	508	6.25	159	34.00	864	4.00	102	20.00	508
4WS16M20-13000-35	48.00	1,219	39.50	1,003	9.50	241	20.00	508	6.25	159	34.00	864	4.00	102	20.00	508
4WS16M20-16000-15	48.00	1,219	34.75	883	9.50	241	20.00	508	6.25	159	34.00	864	4.00	102	20.00	508
4WS16M20-16000-20	48.00	1,219	37.00	940	9.50	241	20.00	508	6.25	159	34.00	864	4.00	102	20.00	508
4WS26M26-22000-20	60.50	1,537	43.50	1,105	12.38	314	25.38	645	8.06	205	44.50	1,130	5.88	149	26.00	660
4WS26M26-22000-25	60.50	1,537	47.00	1,194	12.38	314	25.38	645	8.06	205	44.50	1,130	5.88	149	26.00	660
4WS26M26-22000-35	60.50	1,537	50.00	1,270	12.38	314	25.38	645	8.06	205	44.50	1,130	5.88	149	26.00	660
4WS26M26-26000-10	60.50	1,537	42.00	1,067	12.38	314	25.38	645	8.06	205	44.50	1,130	5.88	149	26.00	660
4WS26M26-26000-15	60.50	1,537	43.50	1,105	12.38	314	25.38	645	8.06	205	44.50	1,130	5.88	149	26.00	660

	L		M		N		P		R		S (Hole Dia.)		Ship Wt.	
	(in)	(mm)	(in)	(mm)	(in)	(mm)	(in)	(mm)	(in)	(mm)	(in)	(mm)	(lb)	(kg)
4WS9M18-7000-20	–	–	12.50	318	2.75	70	22.00	559	12.50	318	1-3/16	30	1,100	499
4WS9M18-7000-30	–	–	12.50	318	2.75	70	22.00	559	12.50	318	1-3/16	30	1,100	499
4WS9M18-10000-10	–	–	12.50	318	2.75	70	22.00	559	12.50	318	1-3/16	30	1,100	499
4WS9M18-10000-20	–	–	12.50	318	2.75	70	22.00	559	12.50	318	1-3/16	30	1,100	499
4WS9M18-10000-30	–	–	12.50	318	2.75	70	22.00	559	12.50	318	1-3/16	30	1,160	527
4WS16M20-13000-15	10.00	254	13.50	343	2.75	70	27.50	699	16.25	413	1-3/16	30	1,550	704
4WS16M20-13000-20	10.00	254	13.50	343	2.75	70	27.50	699	16.25	413	1-3/16	30	1,610	731
4WS16M20-13000-35	10.00	254	13.50	343	2.75	70	27.50	699	16.25	413	1-3/16	30	1,650	749
4WS16M20-16000-15	10.00	254	13.50	343	2.75	70	27.50	699	16.25	413	1-3/16	30	1,550	704
4WS16M20-16000-20	10.00	254	13.50	343	2.75	70	27.50	699	16.25	413	1-3/16	30	1,610	731
4WS26M26-22000-20	13.00	330	18.25	464	3.00	76	36.00	914	21.75	552	1-3/8	35	3,110	1,411
4WS26M26-22000-25	13.00	330	18.25	464	3.00	76	36.00	914	21.75	552	1-3/8	35	3,290	1,493
4WS26M26-22000-35	13.00	330	18.25	464	3.00	76	36.00	914	21.75	552	1-3/8	35	3,350	1,520
4WS26M26-26000-10	13.00	330	18.25	464	3.00	76	36.00	914	21.75	552	1-3/8	35	3,070	1,393
4WS26M26-26000-15	13.00	330	18.25	464	3.00	76	36.00	914	21.75	552	1-3/8	35	3,110	1,411

IMPORTANT:
It is the owner's or operator's responsibility to determine the suitability of the equipment to its intended use. Study all applicable codes, manuals, and regulations. Be sure to read the Owner's Manual supplied with the equipment before operating it.

Dimensions are for reference only and subject to change without notice. Please contact factory for exact dimensions.

4HS SERIES

Thern 4HS series power winches feature dual stage gear reduction for economical handling of large loads. The combination of helical/bevel or helical/parallel and spur gearing make these winches ideal for applications requiring long travel distances and faster line speeds. Our modular design also means we can quickly customize these winches to meet your specific requirements.

FLANGE MOUNTED MOTOR is a 230/460 volt 3 phase motor, 60 cycle, IP 55, TEFC severe duty, reversible, class F insulated, continuous duty brakemotor.

Standard motors comply with relevant standards including NEMA, MG1, ANSI, CSA, IEC and ABS.

LOAD HOLDING MOTOR DISC BRAKE is spring set, electrically released for positive load handling.

DUAL STAGE GEARING, comprised of a helical/bevel or helical/parallel and a spur gears, make winches well suited for applications requiring long travel distances and faster line speeds.

The heat treated helical/bevel or helical/parallel gear set provides improved durability and operates in oil bath, enclosed in a high strength cast iron gearcase, SAE class 30. Double-lip oil seals keep oil in and contaminants out. Large capacity bearings ensure long life. Speed reducers meet AGMA standards.

Guarded, heat treated spur gearing provides secondary reduction. Grease zerks allow for easy lubrication.

FLANGE STYLE ROLLER BEARINGS are self-aligning bearings with cast housing to maintain smooth drum rotation.

WELDED STEEL DRUM with outside flange anchors allow for uniform winding and help extend life of wire rope. Anchors allow cable to be over wound or under wound from either side of the drum.

EXTENDED SOLID STEEL DRUM SHAFT with both ends captured in fabricated steel frame for optimal strength and security.

WIRE ROPE ASSEMBLIES sold separately per customer request.

ANSI B30.7 COMPLIANCE is available. Please contact the factory.

2 YEAR "MOVE IT WITH CONFIDENCE" LIMITED WARRANTY leads the industry.

	Clutch Option	HP	Load Rating	Line Speed
4HS6M	x	2 - 7.5	5,000 - 6,600 lb	15 - 40 fpm
4HS11M	x	5 - 10	9,000 - 11,000 lb	15 - 40 fpm
4HS16M	x	5 - 15	13,000 - 16,000 lb	10 - 40 fpm
4HS26M	x	10 - 20	22,000 - 26,000 lb	15 - 30 fpm
4HS40M	x	20 - 40	33,000 - 40,000 lb	20 - 40 fpm
4HS56M	x	30 - 50	48,000 - 56,000 lb	20 - 35 fpm

OPTIONS AND ACCESSORIES

DRUM MODIFICATIONS (A) include grooved drums, multiple compartment drums and modified drum widths and diameters.

MANUALLY OPERATED JAW CLUTCH (B) disengages for rapid payout of wire rope when not under load. Adjustable drag brake on the drum prevents over-spooling during payout. Clutch option is for horizontal pulling only.

WINCH MOUNTING OPTIONS include base, wall or under hung installation.

CABLE PRESSURE BARS (C) help maintain uniform winding of wire rope.

LIMIT SWITCHES (A) provide secondary shut-off for load travel in one or two directions.

MOTOR OPTIONS include air or hydraulic, voltage or phase changes, IP 65, class H insulated and multi-speed operation.

DUTY RATINGS include IEEE 45 marine duty, tropical duty, severe duty and explosion proof ratings.

BRAKE OPTIONS include over-speed, caliper style, band, and more.

CONTROLS (D) are available in a wide range of standard and custom configurations for single or variable speed.

CORROSION RESISTANT FINISHES (E) for harsh or hazardous environments.

MANUAL OVERRIDES for winch operation in power loss situations.

A

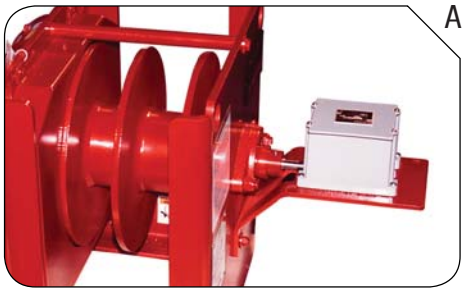

Shown with double compartment and narrow drum width modifications and rotary limit switch.

B

C

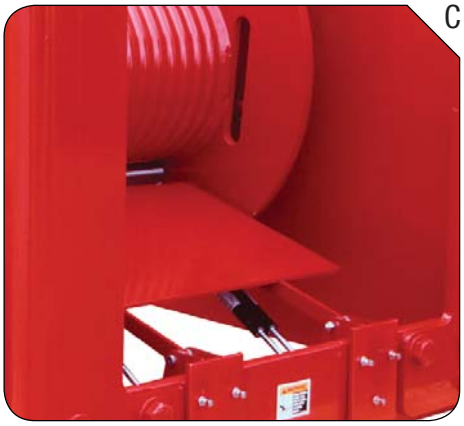

Shown with cable pressure bar and grooved drum modification.

E

Shown with double compartment drum modification and gray epoxy finish.

D

4HS SERIES POWER WINCHES

4HS Series Performance Characteristics

	Model Number Extensions				Motor hp	Load Rating						Line Speed			
	Load Rating	Line Speed	Motor Codes[1]	Clutch Option[2]	hp	[1]st Layer		Mid Drum		Full Drum		[1]st Layer		Full Drum	
	(lb)	(fpm)				(lb)	(kg)	(lb)	(kg)	(lb)	(kg)	(fpm)	(mpm)	(fpm)	(mpm)
4HS6M	5000	15	D, E, F	C	2	5,100	2,314	3,800	1,725	3,100	1,407	13	4.0	22	6.7
4HS6M	5000	20	D, E, F	C	3	5,100	2,314	3,800	1,725	3,100	1,407	20	6.1	33	10.1
4HS6M	5000	30	D, E, F	C	5	5,100	2,314	3,800	1,725	3,100	1,407	33	10.1	55	16.8
4HS6M	6600	15	D, E, F	C	3	6,600	2,994	5,000	2,269	4,000	1,815	15	4.6	25	7.6
4HS6M	6600	25	D, E, F	C	5	6,600	2,994	4,900	2,224	4,000	1,815	25	7.6	41	12.5
4HS6M	6600	40	D, E, F	C	7.5	6,600	2,994	5,000	2,269	4,000	1,815	39	11.9	64	19.5
4HS11M	9000	20	D, E, F	C	5	9,000	4,083	6,200	2,814	4,700	2,132	19	5.8	35	10.7
4HS11M	9000	30	D, E, F	C	7.5	9,000	4,083	6,200	2,814	4,700	2,132	27	8.2	51	15.5
4HS11M	9000	40	D, E, F	C	10	9,000	4,083	6,200	2,814	4,700	2,132	37	11.3	70	21.3
4HS11M	11000	15	D, E, F	C	5	11,000	4,990	7,600	3,449	5,800	2,631	15	4.6	28	8.5
4HS11M	11000	20	D, E, F	C	7.5	11,000	4,990	7,600	3,449	5,800	2,631	21	6.4	40	12.2
4HS11M	11000	30	D, E, F	C	10	11,000	4,990	7,600	3,449	5,800	2,631	27	8.2	51	15.5
4HS16M	13000	20	D, E, F	C	7.5	13,000	5,897	8,900	4,039	6,700	3,040	19	5.8	37	11.3
4HS16M	13000	25	D, E, F	C	10	13,000	5,897	8,900	4,039	6,700	3,040	24	7.3	46	14.0
4HS16M	13000	40	D, E, F	C	15	13,000	5,897	8,900	4,039	6,700	3,040	37	11.3	72	21.9
4HS16M	16000	10	D, E, F	C	5	16,100	7,303	11,000	4,992	8,300	3,765	11	3.4	21	6.4
4HS16M	16000	15	D, E, F	C	7.5	16,000	7,258	10,900	4,947	8,300	3,765	16	4.9	30	9.1
4HS16M	16000	20	D, E, F	C	10	16,100	7,303	11,000	4,992	8,300	3,765	20	6.1	38	11.6
4HS26M	22000	15	D, E, F	C	10	22,000	9,980	16,200	7,352	12,800	5,807	16	4.9	27	8.2
4HS26M	22000	25	D, E, F	C	15	22,000	9,980	16,100	7,307	12,700	5,761	23	7.0	40	12.2
4HS26M	22000	30	D, E, F	C	20	22,900	10,388	16,800	7,624	13,200	5,988	29	8.8	50	15.2
4HS26M	26000	15	D, E, F	C	10	26,000	11,794	19,000	8,623	15,000	6,804	13	4.0	23	7.0
4HS26M	26000	20	D, E, F	C	15	26,000	11,794	19,000	8,623	15,100	6,850	19	5.8	33	10.1
4HS26M	26000	25	D, E, F	C	20	26,000	11,794	19,100	8,668	15,000	6,804	26	7.9	45	13.7
4HS40M	33000	20	D, E, F	C	20	33,100	15,015	24,100	10,937	18,900	8,574	19	5.8	34	10.4
4HS40M	33000	30	D, E, F	C	30	33,000	14,969	24,100	10,937	18,900	8,574	29	8.8	51	15.5
4HS40M	33000	40	D, E, F	C	40	33,100	15,015	24,100	10,937	18,900	8,574	39	11.9	68	20.7
4HS40M	40000	20	D, E, F	C	20	40,300	18,281	29,300	13,297	23,000	10,433	17	5.2	29	8.8
4HS40M	40000	25	D, E, F	C	30	40,300	18,281	29,400	13,342	23,100	10,479	23	7.0	41	12.5
4HS40M	40000	35	D, E, F	C	40	40,000	18,144	29,400	13,342	22,900	10,388	34	10.4	59	18.0
4HS56M	48000	20	D, E, F	C	30	48,000	21,773	37,200	16,882	30,300	13,745	21	6.4	33	10.1
4HS56M	48000	30	D, E, F	C	40	48,000	21,773	37,200	16,882	30,300	13,745	28	8.5	44	13.4
4HS56M	52000	35	D, E, F	C	50	52,200	23,678	40,400	18,334	32,900	14,924	33	10.1	52	15.8
4HS56M	56000	20	D, E, F	C	30	56,000	25,402	43,300	19,650	35,400	16,058	18	5.5	29	8.8
4HS56M	56000	25	D, E, F	C	40	56,000	25,402	43,400	19,695	35,400	16,058	24	7.3	38	11.6
4HS56M	56000	30	D, E, F	C	50	56,200	25,493	43,500	19,741	35,500	16,103	30	9.1	47	14.3

[2] Clutch option for horizontal pulling only.
Please contact factory or nearest Thern Distributor for firm fixed price and delivery.

[1]

Motor Codes		
D	230 volt	3 phase
E	460 volt	3 phase
F	All other voltages please contact factory	

Electric Motor Controls

	Description	Approx. Ship Wt.	
		(lb)	(kg)
10S3D4	electric motor controls 230/3/60 to 3 hp	25	12
10S7D4	electric motor controls 230/3/60 to 7.5 hp	25	12
10S10D4	electric motor controls 230/3/60 to 10 hp	28	13
10S20D4	electric motor controls 230/3/60 to 20 hp	28	13
10S30D4	electric motor controls 230/3/60 to 30 hp	60	28
10S7E4	electric motor controls 460/3/60 to 7.5 hp	25	12
10S15E4	electric motor controls 460/3/60 to 15 hp	25	12
10S20E4	electric motor controls 460/3/60 to 20 hp	28	13
10S40E4	electric motor controls 460/3/60 to 40 hp	60	28
10S60E4	electric motor controls 460/3/60 to 60 hp	60	28

Controls include NEMA 4 rated enclosure, and NEMA 4x rated pendant control on 50 foot cord.
Motor Controls sold separately.
Please contact factory or nearest Thern Distributor for firm fixed price and delivery.
All prices include mounting and wiring to motor.

4HS Series Drum Dimensions

	Drum Diameter (ID)		Flange Diameter (OD)		Drum Width (W)		Fleet Angle Dist (A)[3]	
	(in)	(mm)	(in)	(mm)	(in)	(mm)	(ft)	(m)
4HS6M	7.00	178	14.00	356	18.00	457	29	8.8
4HS11M	9.00	229	20.00	508	18.00	457	29	8.8
4HS16M	10.75	273	24.00	610	20.00	508	32	9.8
4HS26M	14.00	356	28.00	711	26.00	660	42	12.8
4HS40M	18.00	457	36.00	914	30.00	762	48	14.6
4HS56M	24.00	610	43.00	1,092	36.00	914	58	17.7

[3] Recommended minimum distance between drum and lead sheave for smooth drum.
Dimensions are for reference only and subject to change without notice. Please contact factory for exact dimensions.

4HS Series Drum Capacities

Wire Rope Dia.		Breaking Strength[4]		Drum Capacity	4HS6M		4HS11M		4HS16M		4HS26M		4HS40M		4HS56M	
(in)	(mm)	(lb)	(kg)		(ft)	(m)	(ft)	(m)	(ft)	(m)	(ft)	(m)	(ft)	(m)	(ft)	(m)
3/8	9.7	15,100	6,849	1st	80	24.4	–	–	–	–	–	–	–	–	–	–
				Mid	380	115.8	–	–	–	–	–	–	–	–	–	–
				Full	850	259.1	–	–	–	–	–	–	–	–	–	–
7/16	11.2	20,400	9,254	1st	68	20.7	–	–	–	–	–	–	–	–	–	–
				Mid	290	88.4	–	–	–	–	–	–	–	–	–	–
				Full	640	195.1	–	–	–	–	–	–	–	–	–	–
1/2	12.7	26,600	12,066	1st	60	18.3	76	23.2	–	–	–	–	–	–	–	–
				Mid	220	67.1	520	158.5	–	–	–	–	–	–	–	–
				Full	500	152.4	1,170	356.6	–	–	–	–	–	–	–	–
9/16	14.2	33,600	15,240	1st	53	16.2	67	20.4	89	27.1	–	–	–	–	–	–
				Mid	180	54.9	420	128.0	690	210.3	–	–	–	–	–	–
				Full	400	121.9	930	283.5	1,530	466.3	–	–	–	–	–	–
5/8	16.0	41,200	18,688	1st	–	–	59	18.0	78	23.8	–	–	–	–	–	–
				Mid	–	–	340	103.6	560	170.7	–	–	–	–	–	–
				Full	–	–	760	231.6	1,250	381.0	–	–	–	–	–	–
3/4	19.1	58,800	26,671	1st	–	–	48	14.6	65	19.8	–	–	–	–	–	–
				Mid	–	–	240	73.2	400	121.9	–	–	–	–	–	–
				Full	–	–	540	164.6	880	268.2	–	–	–	–	–	–
7/8	22.4	79,600	36,106	1st	–	–	–	–	54	16.5	94	28.7	–	–	–	–
				Mid	–	–	–	–	290	88.4	480	146.3	–	–	–	–
				Full	–	–	–	–	640	195.1	1,070	326.1	–	–	–	–
1	25.4	103,400	46,902	1st	–	–	–	–	47	14.3	82	25.0	–	–	–	–
				Mid	–	–	–	–	220	67.1	370	112.8	–	–	–	–
				Full	–	–	–	–	490	149.4	830	253.0	–	–	–	–
1-1/8	28.7	130,000	58,968	1st	–	–	–	–	–	–	71	21.6	110	33.5	–	–
				Mid	–	–	–	–	–	–	300	91.4	580	176.8	–	–
				Full	–	–	–	–	–	–	660	201.2	1,290	393.2	–	–
1-1/4	31.8	159,800	72,485	1st	–	–	–	–	–	–	63	19.2	95	29.0	160	48.8
				Mid	–	–	–	–	–	–	240	73.2	460	140.2	730	222.5
				Full	–	–	–	–	–	–	530	161.5	1,030	313.9	1,630	496.8
1-3/8	34.9	192,000	87,090	1st	–	–	–	–	–	–	56	17.1	85	25.9	140	42.7
				Mid	–	–	–	–	–	–	200	61.0	390	118.9	610	185.9
				Full	–	–	–	–	–	–	440	134.1	860	262.1	1,360	414.5
1-1/2	38.1	228,000	103,420	1st	–	–	–	–	–	–	–	–	77	23.5	130	39.6
				Mid	–	–	–	–	–	–	–	–	330	100.6	510	155.4
				Full	–	–	–	–	–	–	–	–	720	219.5	1,140	347.5
1-5/8	41.3	264,000	119,750	1st	–	–	–	–	–	–	–	–	–	–	110	33.5
				Mid	–	–	–	–	–	–	–	–	–	–	430	131.1
				Full	–	–	–	–	–	–	–	–	–	–	950	289.6
1-3/4	44.5	306,000	138,800	1st	–	–	–	–	–	–	–	–	–	–	110	33.5
				Mid	–	–	–	–	–	–	–	–	–	–	370	112.8
				Full	–	–	–	–	–	–	–	–	–	–	820	249.9
1-7/8	47.7	348,000	157,851	1st	–	–	–	–	–	–	–	–	–	–	97	29.6
				Mid	–	–	–	–	–	–	–	–	–	–	320	97.5
				Full	–	–	–	–	–	–	–	–	–	–	720	219.5

[4]Values based on 6x37 IWRC EIPS wire rope.
Actual drum capacities 25-30% less, due to nonuniform winding. Wire rope tension will also affect drum capacity.
Wire rope should be selected based on the breaking strength to load rating ratio and application parameters.
Industry standards suggest a 5:1 breaking strength to load rating ratio for lifting and a 3:1 ratio for pulling.

IMPORTANT:
It is the owner's or operator's responsibility to determine the suitability of the equipment to its intended use. Study all applicable codes, manuals, and regulations. Be sure to read the Owner's Manual supplied with the equipment before operating it.

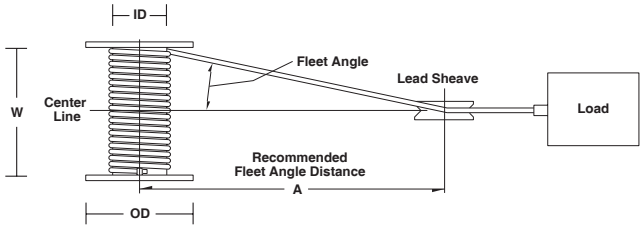

4HS SERIES POWER WINCHES

4HS6-26M Series Winch Dimensions (see opposite page for diagram)

	A		B		C		D		E		F		G		H		J	
	(in)	(mm)	(in)	(mm)	(in)	(mm)	(in)	(mm)	(in)	(mm)	(in)	(mm)	(in)	(mm)	(in)	(mm)	(in)	(mm)
4HS6M-5000-15	36.00	914	27.25	692	8.63	219	12.88	327	2.47	63	2.28	58	16.31	414	22.50	572	3.25	83
4HS6M-5000-20	36.00	914	29.25	743	8.63	219	12.88	327	2.47	63	2.28	58	16.31	414	22.50	572	3.25	83
4HS6M-5000-30	36.00	914	29.25	743	8.63	219	12.88	327	2.47	63	2.28	58	16.31	414	22.50	572	3.25	83
4HS6M-6600-15	36.00	914	29.25	743	8.63	219	12.88	327	2.47	63	2.28	58	16.31	414	22.50	572	3.25	83
4HS6M-6600-25	36.00	914	29.25	743	8.63	219	12.88	327	2.47	63	2.28	58	16.31	414	22.50	572	3.25	83
4HS6M-6600-40	36.00	914	29.25	743	8.63	219	12.88	327	2.47	63	2.28	58	16.31	414	22.50	572	3.25	83
4HS11M-9000-20	41.00	1,041	31.75	806	8.50	216	17.75	451	5.13	130	2.38	60	18.44	468	31.00	787	4.00	102
4HS11M-9000-30	41.50	1,054	34.75	883	8.50	216	17.75	451	5.13	130	2.38	60	18.44	468	31.00	787	4.00	102
4HS11M-9000-40	42.50	1,080	37.00	940	8.50	216	17.75	451	5.13	130	2.38	60	18.44	468	31.00	787	4.00	102
4HS11M-11000-15	41.00	1,041	31.75	806	8.50	216	17.75	451	5.13	130	2.38	60	18.44	468	31.00	787	4.00	102
4HS11M-11000-20	41.50	1,054	34.75	883	8.50	216	17.75	451	5.13	130	2.38	60	18.44	468	31.00	787	4.00	102
4HS11M-11000-30	42.50	1,080	37.00	940	8.50	216	17.75	451	5.13	130	2.38	60	18.44	468	31.00	787	4.00	102
4HS16M-13000-20	46.00	1,168	37.50	953	9.50	241	20.00	508	6.25	159	2.00	51	18.94	481	34.00	864	4.00	102
4HS16M-13000-25	47.00	1,194	39.50	1,003	9.50	241	20.00	508	6.25	159	2.00	51	18.94	481	34.00	864	4.00	102
4HS16M-13000-40	47.00	1,194	42.00	1,067	9.50	241	20.00	508	6.25	159	2.00	51	18.94	481	34.00	864	4.00	102
4HS16M-16000-10	46.00	1,168	34.50	876	9.50	241	20.00	508	6.25	159	2.00	51	18.94	481	34.00	864	4.00	102
4HS16M-16000-15	46.00	1,168	37.50	953	9.50	241	20.00	508	6.25	159	2.00	51	18.94	481	34.00	864	4.00	102
4HS16M-16000-20	47.00	1,194	39.50	1,003	9.50	241	20.00	508	6.25	159	2.00	51	18.94	481	34.00	864	4.00	102
4HS26M-22000-15	60.50	1,537	42.50	1,080	12.38	314	25.38	645	8.06	205	2.44	62	21.00	533	44.50	1,130	5.88	149
4HS26M-22000-25	60.50	1,537	45.00	1,143	12.38	314	25.38	645	8.06	205	2.44	62	21.00	533	44.50	1,130	5.88	149
4HS26M-22000-30	60.50	1,537	48.50	1,232	12.38	314	25.38	645	8.06	205	2.44	62	21.00	533	44.50	1,130	5.88	149
4HS26M-26000-15	60.50	1,537	42.50	1,080	12.38	314	25.38	645	8.06	205	2.44	62	21.00	533	44.50	1,130	5.88	149
4HS26M-26000-20	60.50	1,537	45.00	1,143	12.38	314	25.38	645	8.06	205	2.44	62	21.00	533	44.50	1,130	5.88	149
4HS26M-26000-25	60.50	1,537	48.50	1,232	12.38	314	25.38	645	8.06	205	2.44	62	21.00	533	44.50	1,130	5.88	149

	K		L		M		N		P		R		S (Hole Dia.)		Ship Wt.[1]	
	(in)	(mm)	(in)	(mm)	(in)	(mm)	(in)	(mm)	(in)	(mm)	(in)	(mm)	(in)	(mm)	(lb)	(kg)
4HS6M-5000-15	18.00	457	–	–	11.88	302	1.88	48	18.25	464	11.13	283	7/8	22	570	259
4HS6M-5000-20	18.00	457	–	–	11.88	302	1.88	48	18.25	464	11.13	283	7/8	22	590	268
4HS6M-5000-30	18.00	457	–	–	11.88	302	1.88	48	18.25	464	11.13	283	7/8	22	590	268
4HS6M-6600-15	18.00	457	–	–	11.88	302	1.88	48	18.25	464	11.13	283	7/8	22	590	268
4HS6M-6600-25	18.00	457	–	–	11.88	302	1.88	48	18.25	464	11.13	283	7/8	22	590	268
4HS6M-6600-40	18.00	457	–	–	11.88	302	1.88	48	18.25	464	11.13	283	7/8	22	650	295
4HS11M-9000-20	18.00	457	–	–	12.50	318	2.75	70	22.00	559	12.50	318	1-3/16	30	1,080	490
4HS11M-9000-30	18.00	457	–	–	12.50	318	2.75	70	22.00	559	12.50	318	1-3/16	30	1,120	509
4HS11M-9000-40	18.00	457	–	–	12.50	318	2.75	70	22.00	559	12.50	318	1-3/16	30	1,160	527
4HS11M-11000-15	18.00	457	–	–	12.50	318	2.75	70	22.00	559	12.50	318	1-3/16	30	1,080	490
4HS11M-11000-20	18.00	457	–	–	12.50	318	2.75	70	22.00	559	12.50	318	1-3/16	30	1,120	509
4HS11M-11000-30	18.00	457	–	–	12.50	318	2.75	70	22.00	559	12.50	318	1-3/16	30	1,160	527
4HS16M-13000-20	20.00	508	10.00	254	13.50	343	2.75	70	27.50	699	16.25	413	1-3/16	30	1,580	717
4HS16M-13000-25	20.00	508	10.00	254	13.50	343	2.75	70	27.50	699	16.25	413	1-3/16	30	1,640	744
4HS16M-13000-40	20.00	508	10.00	254	13.50	343	2.75	70	27.50	699	16.25	413	1-3/16	30	1,680	763
4HS16M-16000-10	20.00	508	10.00	254	13.50	343	2.75	70	27.50	699	16.25	413	1-3/16	30	1,520	690
4HS16M-16000-15	20.00	508	10.00	254	13.50	343	2.75	70	27.50	699	16.25	413	1-3/16	30	1,580	717
4HS16M-16000-20	20.00	508	10.00	254	13.50	343	2.75	70	27.50	699	16.25	413	1-3/16	30	1,640	744
4HS26M-22000-15	26.00	660	13.00	330	18.25	464	3.00	76	36.00	914	21.75	552	1-3/8	35	3,130	1,420
4HS26M-22000-25	26.00	660	13.00	330	18.25	464	3.00	76	36.00	914	21.75	552	1-3/8	35	3,170	1,438
4HS26M-22000-30	26.00	660	13.00	330	18.25	464	3.00	76	36.00	914	21.75	552	1-3/8	35	3,350	1,520
4HS26M-26000-15	26.00	660	13.00	330	18.25	464	3.00	76	36.00	914	21.75	552	1-3/8	35	3,130	1,420
4HS26M-26000-20	26.00	660	13.00	330	18.25	464	3.00	76	36.00	914	21.75	552	1-3/8	35	3,170	1,438
4HS26M-26000-25	26.00	660	13.00	330	18.25	464	3.00	76	36.00	914	21.75	552	1-3/8	35	3,350	1,520

[1] Weight shown without clutch; contact factory for clutch weight.
Dimensions are for reference only and subject to change without notice. Please contact factory for exact dimensions.

IMPORTANT:

It is the owner's or operator's responsibility to determine the suitability of the equipment to its intended use. Study all applicable codes, manuals, and regulations. Be sure to read the Owner's Manual supplied with the equipment before operating it.

4HS6-26M Series

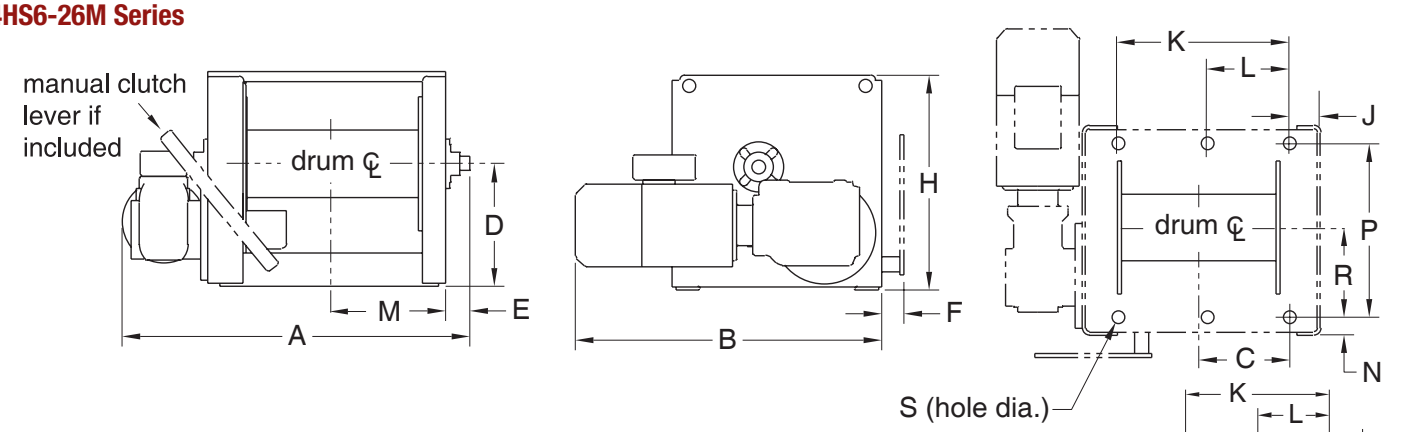

4HS40-56M Series

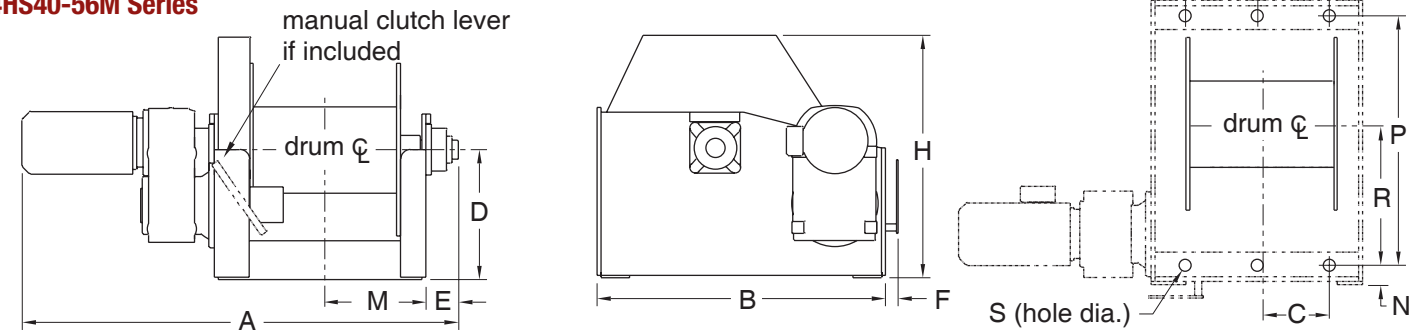

4HS40-56M Series Winch Dimensions

	A		B		C		D		E		F		G		H	
	(in)	(mm)	(in)	(mm)	(in)	(mm)	(in)	(mm)	(in)	(mm)	(in)	(mm)	(in)	(mm)	(in)	(mm)
4HS40M-33000-20	91.00	2,311	60.00	1,524	14.00	356	27.00	686	6.75	171	2.63	67	24.63	626	51.00	1,295
4HS40M-33000-30	94.00	2,388	60.00	1,524	14.00	356	27.00	686	6.75	171	2.63	67	24.63	626	51.00	1,295
4HS40M-33000-40	96.00	2,438	60.00	1,524	14.00	356	27.00	686	6.75	171	2.63	67	24.63	626	51.00	1,295
4HS40M-40000-20	91.00	2,311	60.00	1,524	14.00	356	27.00	686	6.75	171	2.63	67	24.63	626	51.00	1,295
4HS40M-40000-25	94.00	2,388	60.00	1,524	14.00	356	27.00	686	6.75	171	2.63	67	24.63	626	51.00	1,295
4HS40M-40000-35	96.00	2,438	60.00	1,524	14.00	356	27.00	686	6.75	171	2.63	67	24.63	626	51.00	1,295
4HS56M-48000-20	108.00	2,743	72.00	1,829	18.00	457	32.00	813	8.75	222	2.63	67	23.13	588	62.00	1,575
4HS56M-48000-30	110.00	2,794	72.00	1,829	18.00	457	32.00	813	8.75	222	2.63	67	23.13	588	62.00	1,575
4HS56M-52000-35	113.00	2,870	72.00	1,829	18.00	457	32.00	813	8.75	222	2.63	67	23.13	588	62.00	1,575
4HS56M-56000-20	108.00	2,743	72.00	1,829	18.00	457	32.00	813	8.75	222	2.63	67	23.13	588	62.00	1,575
4HS56M-56000-25	110.00	2,794	72.00	1,829	18.00	457	32.00	813	8.75	222	2.63	67	23.13	588	62.00	1,575
4HS56M-56000-30	113.00	2,870	72.00	1,829	18.00	457	32.00	813	8.75	222	2.63	67	23.13	588	62.00	1,575

	J		K		L		M		N		P		R		S (Hole Dia.)		Ship Wt.[1]	
	(in)	(mm)	(in)	(mm)	(in)	(mm)	(in)	(mm)	(in)	(mm)	(in)	(mm)	(in)	(mm)	(in)	(mm)	(lb)	(kg)
4HS40M-33000-20	7.00	178	30.00	762	–	–	21.00	533	4.00	102	52.00	1,321	31.50	800	1-3/4	44	5,570	2,527
4HS40M-33000-30	7.00	178	30.00	762	–	–	21.00	533	4.00	102	52.00	1,321	31.50	800	1-3/4	44	5,660	2,568
4HS40M-33000-40	7.00	178	30.00	762	–	–	21.00	533	4.00	102	52.00	1,321	31.50	800	1-3/4	44	5,800	2,631
4HS40M-40000-20	7.00	178	30.00	762	–	–	21.00	533	4.00	102	52.00	1,321	31.50	800	1-3/4	44	5,570	2,527
4HS40M-40000-25	7.00	178	30.00	762	–	–	21.00	533	4.00	102	52.00	1,321	31.50	800	1-3/4	44	5,660	2,568
4HS40M-40000-35	7.00	178	30.00	762	–	–	21.00	533	4.00	102	52.00	1,321	31.50	800	1-3/4	44	5,800	2,631
4HS56M-48000-20	7.00	178	36.00	914	18.00	457	25.00	635	4.50	114	63.00	1,600	34.50	876	1-3/4	44	9,220	4,183
4HS56M-48000-30	7.00	178	36.00	914	18.00	457	25.00	635	4.50	114	63.00	1,600	34.50	876	1-3/4	44	9,370	4,251
4HS56M-52000-35	7.00	178	36.00	914	18.00	457	25.00	635	4.50	114	63.00	1,600	34.50	876	1-3/4	44	9,480	4,301
4HS56M-56000-20	7.00	178	36.00	914	18.00	457	25.00	635	4.50	114	63.00	1,600	34.50	876	1-3/4	44	9,220	4,183
4HS56M-56000-25	7.00	178	36.00	914	18.00	457	25.00	635	4.50	114	63.00	1,600	34.50	876	1-3/4	44	9,370	4,251
4HS56M-56000-30	7.00	178	36.00	914	18.00	457	25.00	635	4.50	114	63.00	1,600	34.50	876	1-3/4	44	9,480	4,301

Weight shown without clutch; contact factory for clutch weight.
Dimensions are for reference only and subject to change without notice. Please contact factory for exact dimensions.

4HWF SERIES

Thern 4HWF series power winches feature helical/worm gearing making them ideal for applications requiring secure load control and accurate positioning. The enclosed, direct-drive gearing design delivers dependable operation and helps reduce maintenance, while a modular design means we can easily customize these winches to meet your exact specifications.

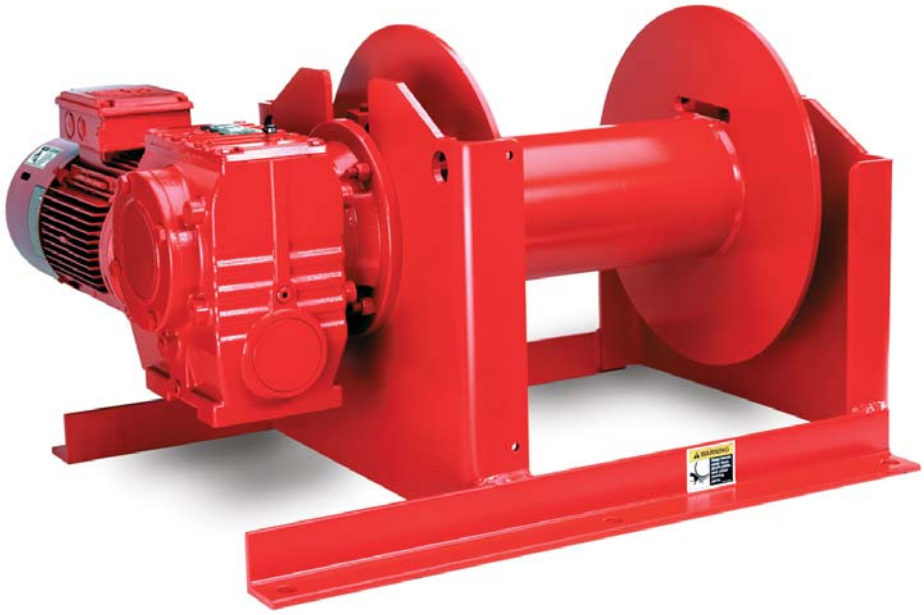

FLANGE MOUNTED MOTOR is a 230/460 volt 3 phase motor, 60 cycle, IP 55, TEFC severe duty, reversible, class F insulated, continuous duty brakemotor.

Standard motors comply with relevant standards including NEMA, MG1, ANSI, CSA, IEC and ABS.

LOAD HOLDING MOTOR DISC BRAKE is spring set, electrically released for positive load control.

DIRECT DRIVE GEAR REDUCERS, comprised of helical/worm gears, deliver lower efficiencies from 65% to 76% making winches well suited for applications requiring secure load control and accurate positioning.

The heat treated helical/worm gear set provides improved durability and operates in an oil bath, enclosed in a high strength cast iron gearcase, SAE class 30. Double-lip oil seals keep oil in and contaminants out. Large capacity bearings ensure long life. Speed reducers meet AGMA standards.

FLANGE STYLE ROLLER BEARINGS are self-aligning bearings with cast housing to maintain smooth drum rotation.

WELDED STEEL DRUM with outside flange anchors allow uniform winding and help extend life of wire rope. Anchors allow cable to be over wound or under wound from either side of the drum.

EXTENDED SOLID STEEL DRUM SHAFT for uniform loading.

WIRE ROPE ASSEMBLIES sold separately per customer request.

ANSI B30.7 COMPLIANCE is available. Please contact the factory.

2 YEAR "MOVE IT WITH CONFIDENCE" LIMITED WARRANTY leads the industry.

	HP	Load Rating	Line Speed
4HWF1M	1.5 - 2	1,500 lb	25 - 35 fpm
4HWF2M	2 - 3	2,000 lb	25 - 35 fpm
4HWF4M	3 - 5	4,000 lb	25 - 35 fpm
4HWF6M	5 - 7.5	6,000 lb	25 - 35 fpm
4HWF8M	7.5 - 10	8,000 lb	25 - 35 fpm

OPTIONS AND ACCESSORIES

DRUM MODIFICATIONS (A) include grooved drums, multiple compartment drums and modified drum widths and diameters.

WINCH MOUNTING OPTIONS include base, wall or under hung installation.

CABLE PRESSURE BARS (B) help maintain uniform winding of wire rope.

LIMIT SWITCHES (C) provide secondary shut-off for load travel in one or two directions.

MOTOR OPTIONS include air or hydraulic, voltage or phase changes, IP 65, class F or H insulated, multi-speed operation.

DUTY RATINGS include IEEE 45 marine duty, tropical duty, severe duty and explosion proof ratings.

BRAKE OPTIONS include over-speed, caliper style, band, and more.

CONTROLS (D) are available in a wide range of standard and custom configurations for single or variable speed.

CORROSION RESISTANT FINISHES (E) for harsh or hazardous environments.

MANUAL OVERRIDES for winch operation in power loss situations.

A

Shown with double compartment drum modification.

B

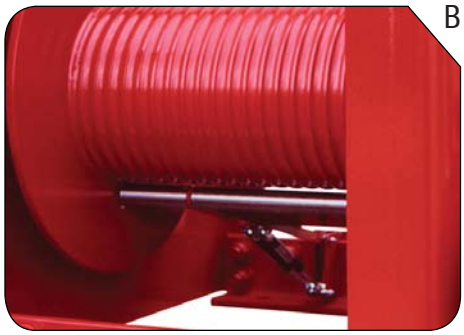

Shown with cable pressure bar and grooved drum modification.

E

Shown with grooved drum modification and gray epoxy finish.

D

C

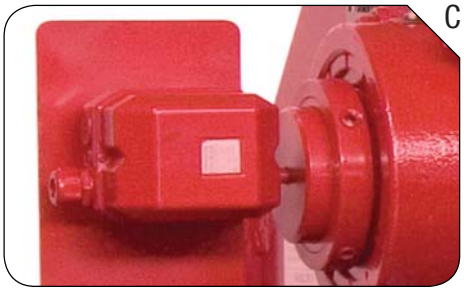

4HWF SERIES POWER WINCHES

4HWF Series Performance Characteristics

	Model Number Extensions			Motor hp	Load Rating						Line Speed			
	Load Rating (lb)	Line Speed (fpm)	Motor Codes[1]	hp	1st Layer (lb)	1st Layer (kg)	Mid Drum (lb)	Mid Drum (kg)	Full Drum (lb)	Full Drum (kg)	1st Layer (fpm)	1st Layer (mpm)	Full Drum (fpm)	Full Drum (mpm)
4HWF1M	1500	25	D, E, F	1.5	1,500	681	900	409	700	318	23	7.0	52	15.8
4HWF1M	1500	35	D, E, F	2	1,500	681	900	409	700	318	32	9.8	73	22.3
4HWF2M	2000	25	D, E, F	2	2,200	998	1,500	681	1,200	545	22	6.7	40	12.2
4HWF2M	2000	35	D, E, F	3	2,200	998	1,500	681	1,200	545	34	10.4	63	19.2
4HWF4M	4000	25	D, E, F	3	4,000	1,815	2,500	1,134	1,800	817	21	6.4	47	14.3
4HWF4M	4000	35	D, E, F	5	4,000	1,815	2,500	1,134	1,800	817	35	10.7	78	23.8
4HWF6M	6000	25	D, E, F	5	6,000	2,722	4,400	1,996	3,400	1,543	24	7.3	42	12.8
4HWF6M	6000	35	D, E, F	7.5	6,000	2,722	4,400	1,996	3,400	1,543	35	10.7	61	18.6
4HWF8M	8000	25	D, E, F	7.5	8,100	3,675	5,800	2,631	4,500	2,042	27	8.2	47	14.3
4HWF8M	8000	35	D, E, F	10	8,100	3,675	5,800	2,631	4,500	2,042	39	11.9	64	19.5

Please contact factory or nearest Thern Distributor for firm fixed price and delivery.

[1]

Motor Codes		
D	230 volt	3 phase
E	460 volt	3 phase
F	All other voltages please contact factory	

4HWF Series Drum Capacities

Wire Rope Dia. (in)	Wire Rope Dia. (mm)	Breaking Strength[2] (lb)	Breaking Strength[2] (kg)	Drum Capacity	4HWF1M (ft)	4HWF1M (m)	4HWF2M (ft)	4HWF2M (m)	4HWF4M (ft)	4HWF4M (m)	4HWF6M (ft)	4HWF6M (m)	4HWF8M (ft)	4HWF8M (m)
1/4	6.4	7,000[3]	3,175	1st	43	13.1	51	15.5	–	–	–	–	–	–
				Mid	370	112.8	340	103.6	–	–	–	–	–	–
				Full	830	253.0	750	228.6	–	–	–	–	–	–
5/16	7.9	9,800[3]	4,445	1st	34	10.4	41	12.5	87	26.5	–	–	–	–
				Mid	250	76.2	230	70.1	950	289.6	–	–	–	–
				Full	560	170.7	500	152.4	2,120	646.2	–	–	–	–
3/8	9.7	15,100	6,849	1st	27	8.2	33	10.1	70	21.3	–	–	–	–
				Mid	180	54.9	160	48.8	680	207.3	–	–	–	–
				Full	400	121.9	360	109.7	1,520	463.3	–	–	–	–
7/16	11.2	20,400	9,254	1st	23	7.0	28	8.5	60	18.3	76	23.2	–	–
				Mid	130	39.6	120	36.6	510	155.4	450	137.2	–	–
				Full	300	91.4	270	82.3	1,140	347.5	990	301.8	–	–
1/2	12.7	26,600	12,066	1st	–	–	–	–	52	15.8	66	20.1	–	–
				Mid	–	–	–	–	400	121.9	350	106.7	–	–
				Full	–	–	–	–	890	271.3	770	234.7	–	–
9/16	14.2	33,600	15,240	1st	–	–	–	–	46	14.0	58	17.7	89	27.1
				Mid	–	–	–	–	320	97.5	280	85.3	540	164.6
				Full	–	–	–	–	710	216.4	620	189.0	1,210	368.8
5/8	16.0	41,200	18,688	1st	–	–	–	–	–	–	51	15.5	78	23.8
				Mid	–	–	–	–	–	–	230	70.1	440	134.1
				Full	–	–	–	–	–	–	510	155.4	990	301.8
3/4	19.1	58,800	26,671	1st	–	–	–	–	–	–	42	12.8	65	19.8
				Mid	–	–	–	–	–	–	160	48.8	310	94.5
				Full	–	–	–	–	–	–	360	109.7	700	213.4
7/8	22.4	79,600	36,106	1st	–	–	–	–	–	–	–	–	54	16.5
				Mid	–	–	–	–	–	–	–	–	230	70.1
				Full	–	–	–	–	–	–	–	–	500	152.4
1	25.4	103,400	46,902	1st	–	–	–	–	–	–	–	–	47	14.3
				Mid	–	–	–	–	–	–	–	–	180	54.9
				Full	–	–	–	–	–	–	–	–	390	118.9

Values based on 6x37 IWRC EIPS wire rope.
[2] Values based on 7x19 galvanized aircraft cable.
[3] **Actual drum capacities 25-30% less, due to nonuniform winding. Wire rope tension will also affect drum capacity.**
Wire rope should be selected based on the breaking strength to load rating ratio and application parameters. Industry standards suggest a 5:1 breaking strength to load rating ratio for lifting and a 3:1 ratio for pulling.

Electric Motor Controls

	Description	Approx. Ship Wt. (lb)	Approx. Ship Wt. (kg)
10S3D4	electric motor controls 230/3/60 to 3 hp	25	12
10S7D4	electric motor controls 230/3/60 to 7.5 hp	25	12
10S10D4	electric motor controls 230/3/60 to 10 hp	28	13
10S7E4	electric motor controls 460/3/60 to 7.5 hp	25	12
10S15D4	electric motor controls 460/3/60 to 15 hp	25	12

Controls include NEMA 4 rated enclosure, and NEMA 4x rated pendant control on 50 foot cord.
Motor Controls sold separately.
Please contact factory or nearest Thern Distributor for firm fixed price and delivery.
All prices include mounting and wiring to motor.

IMPORTANT:
It is the owner's or operator's responsibility to determine the suitability of the equipment to its intended use. Study all applicable codes, manuals, and regulations. Be sure to read the Owner's Manual supplied with the equipment before operating it.

4HWF Series

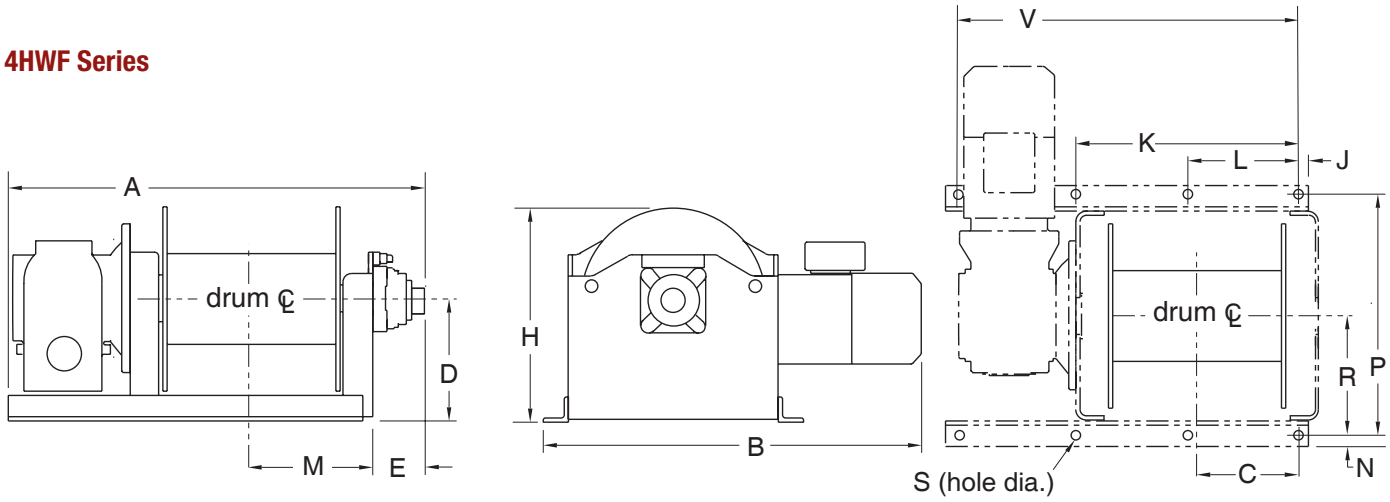

4HWF Series Winch Dimensions

	A		B		C		D		E		H		J		K	
	(in)	(mm)	(in)	(mm)	(in)	(mm)	(in)	(mm)	(in)	(mm)	(in)	(mm)	(in)	(mm)	(in)	(mm)
4HWF1M-1500-25	25.50	648	27.00	686	6.00	152	8.00	203	2.38	60	14.00	356	1.00	25	20.00	508
4HWF1M-1500-35	25.50	648	27.00	686	6.00	152	8.00	203	2.38	60	14.00	356	1.00	25	20.00	508
4HWF2M-2000-25	26.25	667	28.00	711	6.00	152	8.00	203	2.38	60	14.00	356	1.00	25	20.00	508
4HWF2M-2000-35	26.25	667	29.75	756	6.00	152	8.00	203	2.38	60	14.00	356	1.00	25	20.00	508
4HWF4M-4000-25	39.00	991	35.00	889	9.63	245	12.00	305	5.13	130	21.00	533	1.00	25	30.50	775
4HWF4M-4000-35	39.00	991	35.00	889	9.63	245	12.00	305	5.13	130	21.00	533	1.00	25	30.50	775
4HWF6M-6000-25	41.00	1,041	36.00	914	9.63	245	12.00	305	5.13	130	21.00	533	1.00	25	30.50	775
4HWF6M-6000-35	41.00	1,041	39.00	991	9.63	245	12.00	305	5.13	130	21.00	533	1.00	25	30.50	775
4HWF8M-8000-25	50.00	1,270	43.50	1,105	12.00	305	14.50	368	6.25	159	25.50	648	1.25	32	26.50	673
4HWF8M-8000-35	50.00	1,270	45.50	1,156	12.00	305	14.50	368	6.25	159	25.50	648	1.25	32	26.50	673

	L		M		N		P		R		S (Hole Dia.)		V		Ship. Wt.	
	(in)	(mm)	(in)	(mm)	(in)	(mm)	(in)	(mm)	(in)	(mm)	(in)	(mm)	(in)	(mm)	(lb)	(kg)
4HWF1M-1500-25	10.00	254	7.56	192	0.63	16	15.75	400	7.88	200	19/32	15	–	–	190	87
4HWF1M-1500-35	10.00	254	7.56	192	0.63	16	15.75	400	7.88	200	19/32	15	–	–	190	87
4HWF2M-2000-25	10.00	254	7.56	192	0.63	16	15.75	400	7.88	200	19/32	15	–	–	240	109
4HWF2M-2000-35	10.00	254	7.56	192	0.63	16	15.75	400	7.88	200	19/32	15	–	–	240	109
4HWF4M-4000-25	15.25	387	11.50	292	1.00	25	24.00	610	12.00	305	7/8	22	–	–	480	218
4HWF4M-4000-35	15.25	387	11.50	292	1.00	25	24.00	610	12.00	305	7/8	22	–	–	480	218
4HWF6M-6000-25	15.25	387	11.50	292	1.00	25	24.00	610	12.00	305	7/8	22	–	–	650	295
4HWF6M-6000-35	15.25	387	11.50	292	1.00	25	24.00	610	12.00	305	7/8	22	–	–	710	323
4HWF8M-8000-25	13.25	337	14.50	368	1.13	29	28.75	730	14.38	365	1-1/8	29	39.75	1,010	1,120	509
4HWF8M-8000-35	13.25	337	14.50	368	1.13	29	28.75	730	14.38	365	1-1/8	29	39.75	1,010	1,180	536

Dimensions are for reference only and subject to change without notice. Please contact factory for exact dimensions.

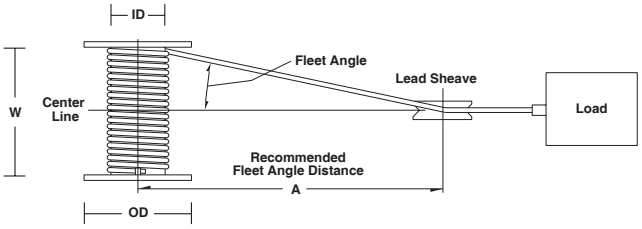

4HWF Series Drum Dimensions

	Drum Diameter (ID)		Flange Diameter (OD)		Drum Width (W)		Fleet Angle Dist (A)[4]	
	(in)	(mm)	(in)	(mm)	(in)	(mm)	(ft)	(m)
4HWF1M	4.50	114	12.00	305	10.00	254	16	4.9
4HWF2M	5.50	140	12.00	305	10.00	254	16	4.9
4HWF4M	7.00	178	18.00	457	16.00	406	26	7.9
4HWF6M	9.00	229	18.00	457	16.00	406	26	7.9
4HWF8M	10.75	273	22.00	559	20.00	508	32	9.8

[4] Recommended minimum distance between drum and lead sheave for smooth drum.
Dimensions are for reference only and subject to change without notice. Please contact factory for exact dimensions.

4HPF SERIES

Thern 4HPF series power winches feature helical/parallel, high efficiency gearing making them ideal for applications requiring long travel distances and faster line speeds. The enclosed, direct-drive gearing design delivers dependable operation and helps reduce maintenance, while a modular design means we can easily customize these winches to meet your exact specifications.

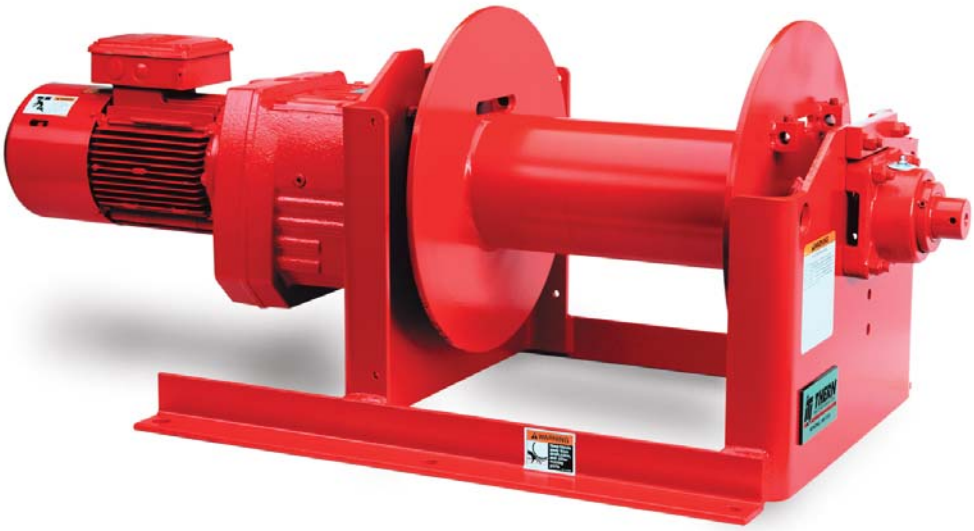

FLANGE MOUNTED MOTOR is a 230/460 volt 3 phase, 60 cycle, IP 55, TEFC severe duty, reversible, class F insulated, continuous duty brakemotor.

Standard motors comply with relevant standards including NEMA, MG1, ANSI, CSA, IEC and ABS.

LOAD HOLDING MOTOR DISC BRAKE is spring set, electrically released for positive load control.

DIRECT DRIVE GEAR REDUCERS, comprised of helical/parallel gears, deliver high efficiencies from 88% to 94% making winches well suited for applications requiring long travel distances and faster line speeds.

The heat treated helical/parallel gear set provides improved durability and operates in an oil bath, enclosed in a high strength cast iron gearcase, SAE class 30. Double-lip oil seals keep oil in and contaminants out. Large capacity bearings ensure long life. Speed reducers meet AGMA standards.

FLANGE STYLE ROLLER BEARINGS are self-aligning with cast housings to maintain smooth drum rotation.

WELDED STEEL DRUM with outside flange anchors allow for uniform winding and help extend life of wire rope. Anchors allow cable to be over wound or under wound from either side of the drum.

EXTENDED SOLID STEEL DRUM SHAFT for uniform loading.

WIRE ROPE ASSEMBLIES sold separately per customer request.

ANSI B30.7 COMPLIANCE is available. Please contact the factory.

2 YEAR "MOVE IT WITH CONFIDENCE" LIMITED WARRANTY leads the industry.

4HPF SERIES

	Clutch Option	HP	Load Rating	Line Speed
4HPF2M	4HPF2MC	1 - 2	2,000 lb	20 - 35 fpm
4HPF3M	4HPF3MC	1.5 - 3	3,000 lb	20 - 35 fpm
4HPF5M	4HPF5MC	3 - 5	5,000 lb	20 - 35 fpm
4HPF7M	4HPF7MC	5 - 7.5	7,000 lb	25 - 40 fpm
4HPF9M	4HPF9MC	5 - 10	9,000 lb	20 - 40 fpm
4HPF15M	4HPF15MC	10 - 15	15,000 lb	20 - 35 fpm
4HPF20M	-	10 - 25	20,000 lb	20 - 40 fpm
4HPF25M	-	15 - 30	25,000 lb	20 - 40 fpm

A

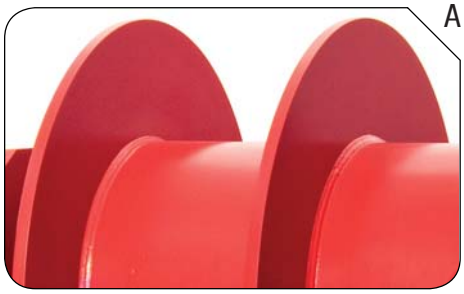

Shown with double compartment drum modification.

B

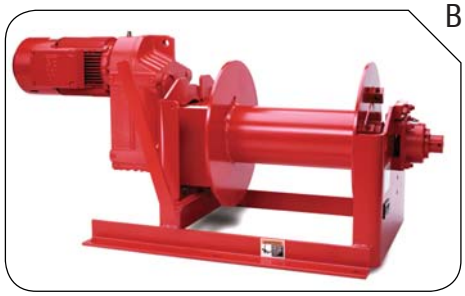

C

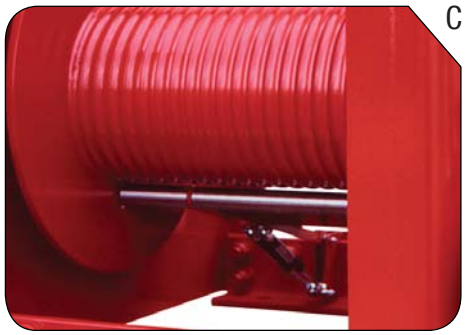

Shown with cable pressure bar and grooved drum modification.

D

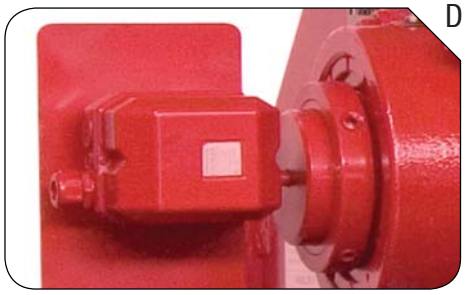

E

OPTIONS AND ACCESSORIES

DRUM MODIFICATIONS (A) include grooved drums, multiple compartment drums and modified drum widths and diameters.

MANUALLY OPERATED JAW CLUTCH (B) disengages for rapid payout of wire rope when not under load. Adjustable drag brake on the drum prevents over-spooling during payout. Clutch option is for horizontal pulling only.

WINCH MOUNTING OPTIONS include base, wall or under hung installation.

CABLE PRESSURE BARS (C) help maintain uniform winding of wire rope.

LIMIT SWITCHES (D) provide secondary shut-off for load travel in one or two directions.

MOTOR OPTIONS include air or hydraulic, voltage or phase changes, IP 65, class F or H insulated and multi-speed operation.

DUTY RATINGS include IEEE 45 marine duty, tropical duty, severe duty and explosion proof ratings.

BRAKE OPTIONS include over-speed, caliper style, band, and more.

CONTROLS (E) are available in a wide range of standard and custom configurations for single or variable speed.

CORROSION RESISTANT FINISHES for harsh or hazardous environments.

MANUAL OVERRIDES for winch operation in power loss situations.

4HPF SERIES POWER WINCHES

4HPF Series Performance Characteristics

	Model Number Extensions			Motor hp	Load Rating						Line Speed			
	Load Rating	Line Speed	Motor Codes[1]	hp	1st Layer		Mid Drum		Full Drum		1st Layer		Full Drum	
	(lb)	(fpm)			(lb)	(kg)	(lb)	(kg)	(lb)	(kg)	(fpm)	(mpm)	(fpm)	(mpm)
4HPF2M	2000	20	D, E, F	1	2,100	953	1,300	590	1,000	454	17	5.2	38	11.6
4HPF2M	2000	35	D, E, F	2	2,100	953	1,300	590	1,000	454	34	10.4	76	23.2
4HPF3M	3000	20	D, E, F	1.5	3,000	1,361	2,100	953	1,600	726	19	5.8	33	10.1
4HPF3M	3000	35	D, E, F	3	3,300	1,497	2,300	1,044	1,800	817	33	10.1	59	18.0
4HPF5M	5000	20	D, E, F	3	5,000	2,268	3,100	1,407	2,300	1,044	22	6.7	49	14.9
4HPF5M	5000	35	D, E, F	5	5,000	2,268	3,100	1,407	2,300	1,044	37	11.3	81	24.7
4HPF7M	7000	25	D, E, F	5	7,300	3,312	5,400	2,450	4,300	1,951	24	7.3	40	12.2
4HPF7M	7000	40	D, E, F	7.5	7,300	3,312	5,400	2,450	4,300	1,951	38	11.6	64	19.5
4HPF9M	9000	20	D, E, F	5	9,000	4,083	6,500	2,949	5,100	2,314	21	6.4	37	11.3
4HPF9M	9000	40	D, E, F	10	9,000	4,083	6,500	2,949	5,100	2,314	41	12.5	73	22.3
4HPF15M	15000	25	D, E, F	10	14,300	6,487	10,900	4,945	8,800	3,992	26	7.9	41	12.5
4HPF15M	15000	35	D, E, F	15	15,100	6,850	11,500	5,217	9,300	4,219	36	11.0	59	18.0
4HPF20M	20000	20	D, E, F	10	20,100	9,118	14,100	6,396	10,800	4,899	17	5.2	31	9.4
4HPF20M	20000	40	D, E, F	25	20,100	9,118	14,000	6,351	10,800	4,899	43	13.1	81	24.7
4HPF25M	25000	20	D, E, F	15	25,200	11,431	19,200	8,710	15,500	7,031	20	6.1	32	9.8
4HPF25M	25000	40	D, E, F	30	25,000	11,340	19,000	8,619	15,400	6,986	42	12.8	68	20.7
4HPF2MC[2]	2000	20	D, E, F	1	2,100	953	1,300	590	1,000	454	17	5.2	38	11.6
4HPF2MC[2]	2000	35	D, E, F	2	2,100	953	1,300	590	1,000	454	34	10.4	75	22.9
4HPF3MC[2]	3000	20	D, E, F	1.5	3,300	1,497	2,300	1,044	1,800	817	17	5.2	60	18.3
4HPF3MC[2]	3000	35	D, E, F	3	3,300	1,497	2,300	1,044	1,800	817	34	10.4	61	18.6
4HPF5MC[2]	5000	20	D, E, F	3	5,000	2,268	3,100	1,407	2,300	1,044	21	6.4	45	13.7
4HPF5MC[2]	5000	35	D, E, F	5	5,000	2,268	3,100	1,407	2,300	1,044	36	11.0	80	24.4
4HPF7MC[2]	7000	25	D, E, F	5	7,300	3,312	5,400	2,450	4,300	1,951	25	7.6	42	12.8
4HPF7MC[2]	7000	35	D, E, F	7.5	7,300	3,312	5,400	2,450	4,300	1,951	36	11.0	61	18.6
4HPF9MC[2]	9000	20	D, E, F	5	9,000	4,083	6,500	2,949	5,100	2,314	21	6.4	37	11.3
4HPF9MC[2]	9000	40	D, E, F	10	9,000	4,083	6,500	2,949	5,100	2,314	41	12.5	73	22.3
4HPF15MC[2]	15000	20	D, E, F	10	15,100	6,850	11,500	5,217	9,300	4,219	22	6.7	36	11.0
4HPF15MC[2]	15000	35	D, E, F	15	15,200	6,895	11,600	5,262	9,400	4,264	35	10.7	57	17.4

Please contact factory or nearest Thern Distributor for firm fixed price and delivery.

[2] Manual clutch models.

[1]

Motor Codes		
D	230 volt	3 phase
E	460 volt	3 phase
F	All other voltages please contact factory	

4HPF Series Drum Dimensions

	Drum Diameter (ID)		Flange Diameter (OD)		Drum Width (W)		Fleet Angle Dist (A)[3]	
	(in)	(mm)	(in)	(mm)	(in)	(mm)	(ft)	(m)
4HPF2M	4.50	114	12.00	305	10.00	254	16	4.9
4HPF3M	5.50	140	12.00	305	10.00	254	16	4.9
4HPF5M	7.00	178	18.00	457	16.00	406	26	7.9
4HPF7M	9.00	229	18.00	457	16.00	406	26	7.9
4HPF9M	10.75	273	22.00	559	20.00	508	32	9.8
4HPF15M	11.50	292	22.00	559	20.00	508	32	9.8
4HPF20M	14.00	356	30.00	762	30.00	762	48	14.6
4HPF25M	16.00	406	30.00	762	30.00	762	48	14.6

[3] Recommended minimum distance between drum and lead sheave for smooth drum.
Dimensions are for reference only and subject to change without notice.
Please contact factory for exact dimensions.

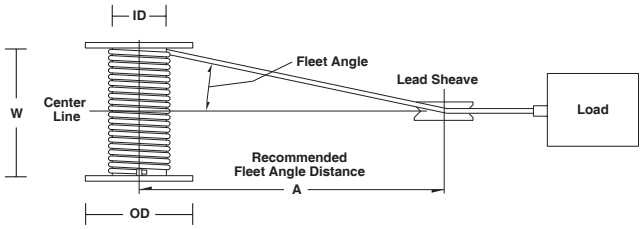

Electric Motor Controls

	Description	Approx. Ship Wt.	
		(lb)	(kg)
10S3D4	electric motor controls 230/3/60 to 3 hp	25	12
10S7D4	electric motor controls 230/3/60 to 7.5 hp	25	12
10S10D4	electric motor controls 230/3/60 to 10 hp	28	13
10S20D4	electric motor controls 230/3/60 to 20 hp	28	13
10S30D4	electric motor controls 230/3/60 to 30 hp	60	28
10S7E4	electric motor controls 460/3/60 to 7.5 hp	25	12
10S15E4	electric motor controls 460/3/60 to 15 hp	25	12
10S20E4	electric motor controls 460/3/60 to 20 hp	28	13
10S40E4	electric motor controls 460/3/60 to 40 hp	60	28

Controls include NEMA 4 rated enclosure, and NEMA 4x rated pendant control on 50 foot cord.

Motor Controls sold separately.
Please contact factory or nearest Thern Distributor for firm fixed price and delivery.
All prices include mounting and wiring to motor.

4HPF Series Drum Capacities

Wire Rope Dia.		Breaking Strength[4]		Drum Capacity	4HPF2M		4HPF3M		4HPF5M		4HPF7M		4HPF9M		4HPF15M		4HPF20M		4HPF25M	
(in)	(mm)	(lb)	(kg)		(ft)	(m)	(ft)	(m)	(ft)	(m)	(ft)	(m)	(ft)	(m)	(ft)	(m)	(ft)	(m)	(ft)	(m)
				1st	43	13.1	51	15.5	–	–	–	–	–	–	–	–	–	–	–	–
1/4	6.4	7,000[5]	3,175	Mid	370	112.8	340	103.6	–	–	–	–	–	–	–	–	–	–	–	–
				Full	830	253.0	750	228.6	–	–	–	–	–	–	–	–	–	–	–	–
				1st	34	10.4	41	12.5	87	26.5	–	–	–	–	–	–	–	–	–	–
5/16	7.9	9,800[5]	4,445	Mid	250	76.2	230	70.1	950	289.6	–	–	–	–	–	–	–	–	–	–
				Full	560	170.7	500	152.4	2,120	646.2	–	–	–	–	–	–	–	–	–	–
				1st	27	8.2	33	10.1	70	21.3	–	–	–	–	–	–	–	–	–	–
3/8	9.7	15,100	6,849	Mid	180	54.9	160	48.8	680	207.3	–	–	–	–	–	–	–	–	–	–
				Full	400	121.9	360	109.7	1,520	463.3	–	–	–	–	–	–	–	–	–	–
				1st	23	7.0	28	8.5	60	18.3	76	23.2	–	–	–	–	–	–	–	–
7/16	11.2	20,400	9,254	Mid	130	39.6	120	36.6	510	155.4	450	137.2	–	–	–	–	–	–	–	–
				Full	300	91.4	270	82 .3	1,140	347.5	990	301.8	–	–	–	–	–	–	–	–
				1st	–	–	–	–	52	15	66	20.1	–	–	–	–	–	–	–	–
1/2	12.7	26,600	12,066	Mid	–	–	–	–	400	121	350	106.7	–	–	–	–	–	–	–	–
				Full	–	–	–	–	890	271	770	234.7	–	–	–	–	–	–	–	–
				1st	–	–	–	–	46	14.0	58	17.7	89	27.1	–	–	–	–	–	–
9/16	14.2	33,600	15,240	Mid	–	–	–	–	320	97.5	280	85.3	540	164.6	–	–	–	–	–	–
				Full	–	–	–	–	710	216.4	620	189.0	1,210	368.8	–	–	–	–	–	–
				1st	–	–	–	–	–	–	51	15.5	78	23.8	84	25.6	–	–	–	–
5/8	16.0	41,200	18,688	Mid	–	–	–	–	–	–	230	70.1	440	134.1	420	128.0	–	–	–	–
				Full	–	–	–	–	–	–	510	155.5	990	301.8	940	286.5	–	–	–	–
				1st	–	–	–	–	–	–	–	–	65	19.8	69	21.0	130	39.6	–	–
3/4	19.1	58,800	26,671	Mid	–	–	–	–	–	–	–	–	310	94.5	300	91.4	930	283.5	–	–
				Full	–	–	–	–	–	–	–	–	700	213.4	660	201.2	2,070	630.9	–	–
				1st	–	–	–	–	–	–	–	–	54	16.5	57	17.4	110	33.5	–	–
7/8	22.4	79,600	36,106	Mid	–	–	–	–	–	–	–	–	230	70.1	210	64.0	670	204.2	–	–
				Full	–	–	–	–	–	–	–	–	500	152.4	480	146.3	1,490	454.2	–	–
				1st	–	–	–	–	–	–	–	–	47	14.3	57	17.4	97	29.6	110	33.5
1	25.4	103,400	46,902	Mid	–	–	–	–	–	–	–	–	180	54.9	210	64.0	520	158.5	470	143.3
				Full	–	–	–	–	–	–	–	–	390	118.9	480	146.3	1,160	353.6	1,050	320.0
				1st	–	–	–	–	–	–	–	–	–	–	–	–	85	25.9	96	29.3
1-1/8	28.7	130,000	58,968	Mid	–	–	–	–	–	–	–	–	–	–	–	–	420	128.0	380	115.8
				Full	–	–	–	–	–	–	–	–	–	–	–	–	920	280.4	840	256.0
				1st	–	–	–	–	–	–	–	–	–	–	–	–	76	23.2	86	26.2
1-1/4	31.8	159,800	72,485	Mid	–	–	–	–	–	–	–	–	–	–	–	–	330	100.6	300	91.4
				Full	–	–	–	–	–	–	–	–	–	–	–	–	740	225.6	670	204.2
				1st	–	–	–	–	–	–	–	–	–	–	–	–	68	20.7	76	23.2
1-3/8	34.9	192,000	87,090	Mid	–	–	–	–	–	–	–	–	–	–	–	–	280	85.3	250	76.2
				Full	–	–	–	–	–	–	–	–	–	–	–	–	610	185.9	560	170.7
				1st	–	–	–	–	–	–	–	–	–	–	–	–	–	–	69	21.0
1-1/2	38.1	228,000	103,420	Mid	–	–	–	–	–	–	–	–	–	–	–	–	–	–	210	64.0
				Full	–	–	–	–	–	–	–	–	–	–	–	–	–	–	470	143.3

[4] Values based on 6x37 IWRC EIPS wire rope.

[5] Values based on 7x19 galvanized aircraft cable.

Actual drum capacities 25-30% less, due to nonuniform winding. Wire rope tension will also affect drum capacity.

Wire rope should be selected based on the breaking strength to load rating ratio and application parameters. Industry standards suggest a 5:1 breaking strength to load rating ratio for lifting and a 3:1 ratio for pulling.

IMPORTANT:

It is the owner's or operator's responsibility to determine the suitability of the equipment to its intended use. Study all applicable codes, manuals, and regulations. Be sure to read the Owner's Manual supplied with the equipment before operating it.

4HPF Series

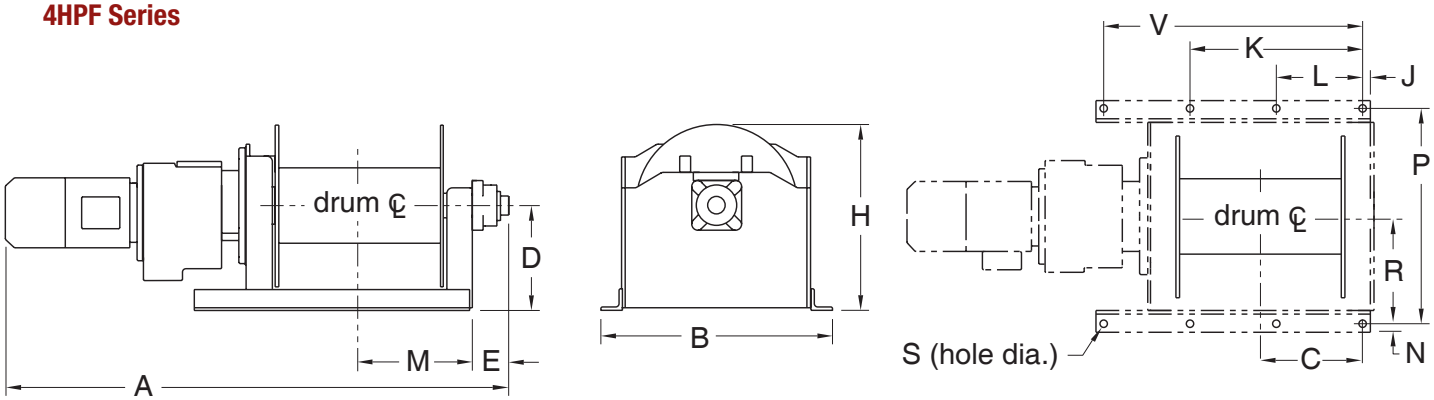

4HPF Series Winch Dimensions

	A		B		C		D		E		H		J		K	
	(in)	(mm)	(in)	(mm)	(in)	(mm)	(in)	(mm)	(in)	(mm)	(in)	(mm)	(in)	(mm)	(in)	(mm)
4HPF2M-2000-20	37.50	953	17.00	432	6.56	167	8.00	203	2.38	60	14.50	368	1.00	25	20.00	508
4HPF2M-2000-35	39.00	991	17.00	432	6.56	167	8.00	203	2.38	60	14.50	368	1.00	25	20.00	508
4HPF3M-3000-20	42.00	1,067	17.00	432	6.56	167	8.00	203	2.38	60	14.25	362	1.00	25	20.00	508
4HPF3M-3000-35	42.00	1,067	17.00	432	6.56	167	8.00	203	2.38	60	14.25	362	1.00	25	20.00	508
4HPF5M-5000-20	54.50	1,384	26.00	660	9.63	245	12.00	305	5.13	130	21.00	533	1.00	25	30.50	775
4HPF5M-5000-35	54.50	1,384	26.00	660	9.63	245	12.00	305	5.13	130	21.00	533	1.00	25	30.50	775
4HPF7M-7000-25	56.00	1,422	26.00	660	9.63	245	12.00	305	5.13	130	21.00	533	1.00	25	30.50	775
4HPF7M-7000-40	59.00	1,499	26.00	660	9.63	245	12.00	305	5.13	130	21.00	533	1.00	25	30.50	775
4HPF9M-9000-20	64.50	1,638	31.00	787	12.00	305	14.50	368	6.25	159	25.50	648	1.25	32	26.50	673
4HPF9M-9000-40	69.50	1,765	31.00	787	12.00	305	14.50	368	6.25	159	25.50	648	1.25	32	26.50	673
4HPF15M-15000-25	71.50	1,816	31.00	787	12.00	305	14.50	368	6.25	159	25.50	648	1.25	32	26.50	673
4HPF15M-15000-35	74.00	1,880	31.00	787	12.00	305	14.50	368	6.25	159	25.50	648	1.25	32	26.50	673
4HPF20M-20000-20	90.00	2,286	43.00	1,092	18.88	480	19.50	495	6.75	171	34.50	876	1.50	38	32.00	813
4HPF20M-20000-40	97.00	2,464	43.00	1,092	18.88	480	19.50	495	6.75	171	34.50	876	1.50	38	32.00	813
4HPF25M-25000-20	94.00	2,388	43.00	1,092	18.88	480	19.50	495	6.75	171	34.50	876	1.50	38	32.00	813
4HPF25M-25000-40	100.00	2,540	43.00	1,092	18.88	480	19.50	495	6.75	171	34.50	876	1.50	38	32.00	813

	L		M		N		P		R		S (Hole Dia.)		V		Ship Wt.	
	(in)	(mm)	(in)	(mm)	(in)	(mm)	(in)	(mm)	(in)	(mm)	(in)	(mm)	(in)	(mm)	(lb)	(kg)
4HPF2M-2000-20	10.00	254	7.56	192	0.63	16	15.75	400	7.86	200	19/32	15	–	–	170	78
4HPF2M-2000-35	10.00	254	7.56	192	0.63	16	15.75	400	7.86	200	19/32	15	–	–	200	91
4HPF3M-3000-20	10.00	254	7.56	192	0.63	16	15.75	400	7.86	200	19/32	15	–	–	250	114
4HPF3M-3000-35	10.00	254	7.56	192	0.63	16	15.75	400	7.86	200	19/32	15	–	–	260	118
4HPF5M-5000-20	15.25	387	11.50	292	1.00	25	24.00	610	12.00	305	7/8	22	–	–	500	227
4HPF5M-5000-35	15.25	387	11.50	292	1.00	25	24.00	610	12.00	305	7/8	22	–	–	500	227
4HPF7M-7000-25	15.25	387	11.50	292	1.00	25	24.00	610	12.00	305	7/8	22	–	–	650	295
4HPF7M-7000-40	15.25	387	11.50	292	1.00	25	24.00	610	12.00	305	7/8	22	–	–	760	345
4HPF9M-9000-20	13.25	337	14.50	368	1.13	29	28.75	730	14.38	365	1 1/8	29	39.75	1,010	1,000	454
4HPF9M-9000-40	13.25	337	14.50	368	1.13	29	28.75	730	14.38	365	1 1/8	29	39.75	1,010	1,120	509
4HPF15M-15000-25	13.25	337	14.50	368	1.13	29	28.75	730	14.38	365	1 1/8	29	39.75	1,010	1,340	608
4HPF15M-15000-35	13.25	337	14.50	368	1.13	29	28.75	730	14.38	365	1 1/8	29	39.75	1,010	1,370	622
4HPF20M-20000-20	16.00	406	21.00	533	1.50	38	40.00	1,016	20.00	508	1 3/8	35	48.00	1,219	2,400	1,089
4HPF20M-20000-40	16.00	406	21.00	533	1.50	38	40.00	1,016	20.00	508	1 3/8	35	48.00	1,219	2,620	1,189
4HPF25M-25000-20	16.00	406	21.00	533	1.50	38	40.00	1,016	20.00	508	1 3/8	35	48.00	1,219	3,190	1,447
4HPF25M-25000-40	16.00	406	21.00	533	1.50	38	40.00	1,016	20.00	508	1 3/8	35	48.00	1,219	3,440	1,561

Dimensions are for reference only and subject to change without notice. Please contact factory for exact dimensions.

4HPFC Series

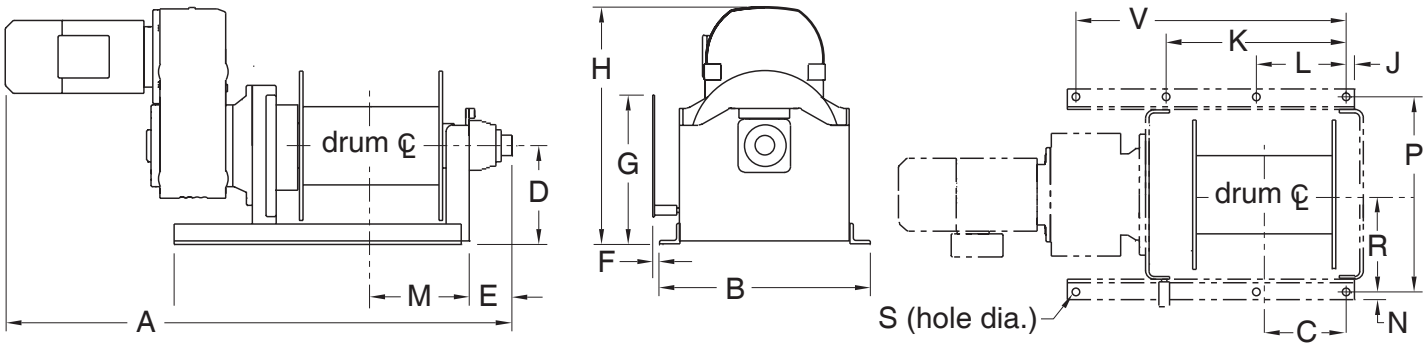

4HPFC Series Winch Dimensions

	A		B		C		D		E		F		G		H		J	
	(in)	(mm)	(in)	(mm)	(in)	(mm)	(in)	(mm)	(in)	(mm)	(in)	(mm)	(in)	(mm)	(in)	(mm)	(in)	(mm)
4HPF2MC-2000-20	38.50	978	17.00	432	6.00	152	8.00	203	2.38	60	0.88	23	19.88	505	17.00	432	1.00	25
4HPF2MC-2000-35	40.00	1,016	17.00	432	6.00	152	8.00	203	2.38	60	0.88	23	19.88	505	17.00	432	1.00	25
4HPF3MC-3000-20	41.00	1,041	17.00	432	6.00	152	8.00	203	2.38	60	0.88	23	19.88	505	18.25	464	1.00	25
4HPF3MC-3000-35	43.00	1,092	17.00	432	6.00	152	8.00	203	2.38	60	0.88	23	19.88	505	18.25	464	1.00	25
4HPF5MC-5000-20	55.00	1,397	26.00	660	9.63	245	12.00	305	5.13	130	–	–	22.25	565	24.25	616	1.00	25
4HPF5MC-5000-35	55.00	1,397	26.00	660	9.63	245	12.00	305	5.13	130	–	–	22.25	565	24.25	616	1.00	25
4HPF7MC-7000-25	56.00	1,422	26.00	660	9.63	245	12.00	305	5.13	130	–	–	22.25	565	27.00	686	1.00	25
4HPF7MC-7000-40	58.50	1,486	26.00	660	9.63	245	12.00	305	5.13	130	–	–	22.25	565	27.00	686	1.00	25
4HPF9MC-9000-20	66.00	1,676	31.00	787	12.00	305	14.50	368	6.25	159	–	–	22.00	559	32.00	813	1.25	32
4HPF9MC-9000-40	71.00	1.803	31.00	787	12.00	305	14.50	368	6.25	159	–	–	22.00	559	32.00	813	1.25	32
4HPF15MC-15000-25	72.50	1,842	31.00	787	12.00	305	14.50	368	6.25	159	–	–	22.00	559	35.00	889	1.25	32
4HPF15MC-15000-35	74.50	1,892	31.00	787	12.00	305	14.50	368	6.25	159	–	–	22.00	559	35.00	889	1.25	32

	K		L		M		N		P		R		S (Hole Dia.)		V		Ship Wt.	
	(in)	(mm)	(in)	(mm)	(in)	(mm)	(in)	(mm)	(in)	(mm)	(in)	(mm)	(in)	(mm)	(in)	(mm)	(lb)	(kg)
4HPF2MC-2000-20	20.00	508	10.00	254	7.56	192	0.63	16	15.75	400	7.88	200	19/32	15	–	–	270	123
4HPF2MC-2000-35	20.00	508	10.00	254	7.56	192	0.63	16	15.75	400	7.88	200	19/32	15	–	–	300	137
4HPF3MC-3000-20	20.00	508	10.00	254	7.56	192	0.63	16	15.75	400	7.88	200	19/32	15	–	–	280	128
4HPF3MC-3000-35	20.00	508	10.00	254	7.56	192	0.63	16	15.75	400	7.88	200	19/32	15	–	–	300	137
4HPF5MC-5000-20	30.50	775	15.25	387	11.50	292	1.00	25	24.00	610	12.00	305	7/8	22	–	–	550	250
4HPF5MC-5000-35	30.50	775	15.25	387	11.50	292	1.00	25	24.00	610	12.00	305	7/8	22	–	–	550	250
4HPF7MC-7000-25	30.50	775	15.25	387	11.50	292	1.00	25	24.00	610	12.00	305	7/8	22	–	–	700	318
4HPF7MC-7000-40	30.50	775	15.25	387	11.50	292	1.00	25	24.00	610	12.00	305	7/8	22	–	–	760	345
4HPF9MC-9000-20	26.50	673	13.25	337	14.50	368	1.13	29	28.75	730	14.38	365	1-1/8	29	39.75	1,010	1,250	567
4HPF9MC-9000-40	26.50	673	13.25	337	14.50	368	1.13	29	28.75	730	14.38	365	1-1/8	29	39.75	1,010	1,360	617
4HPF15MC-15000-25	26.50	673	13.25	337	14.50	368	1.13	29	28.75	730	14.38	365	1-1/8	29	39.75	1,010	1,580	717
4HPF15MC-15000-35	26.50	673	13.25	337	14.50	368	1.13	29	28.75	730	14.38	365	1-1/8	29	39.75	1,010	1,620	735

Dimensions are for reference only and subject to change without notice. Please contact factory for exact dimensions.

IMPORTANT:
It is the owner's or operator's responsibility to determine the suitability of the equipment to its intended use. Study all applicable codes, manuals, and regulations. Be sure to read the Owner's Manual supplied with the equipment before operating it.

4HBP SERIES

capacity up to 100,000 lbs

Thern 4HBP series power winches feature high efficiency helical-bevel/planetary gearing making them ideal for heavy-duty applications requiring long travel distances and quick line speeds.

The enclosed, direct-drive gearing design delivers dependable operation and helps reduce maintenance, while a modular design means we can easily customize these winches to meet exact specifications.

WELDED STEEL DRUM with flange anchors allow for uniform winding and help extend life of wire rope. Anchors allow cable to be over wound or under wound from either side of the drum.

CONTINUOUS SOLID STEEL DRUM SHAFT for uniform loading.

WIRE ROPE ASSEMBLIES sold separately per customer request.

ANSI B30.7 COMPLIANCE is available. Please contact the factory.

2 YEAR MOVE IT WITH CONFIDENCE LIMITED WARRANTY leads the industry.

FLANGE MOUNTED MOTOR is a 230/460 volt 3 phase, 60 cycle, IP 54, TEFC severe duty, reversible, class F insulated, continuous duty brakemotor.

Standard motors comply with relevant standards including NEMA, MG1, ANSI, CSA, IEC and ABS.

LOAD HOLDING MOTOR DISC BRAKE is spring set, electrically released for positive load control.

DIRECT DRIVE GEAR REDUCER with helical-bevel/planetary gearing delivers high efficiencies up to 88% making winches well suited for heavy-duty applications requiring long travel distances and faster line speeds.

The heat treated helical-bevel/planetary gear set provides improved durability and operates in an oil bath, enclosed in a high strength cast iron gear case, SAE class 30. Double-lip oil seals keep oil in and contaminants out. Large capacity bearings ensure long life. Speed reducers meet AGMA standards.

PLANETARY GEAR DRIVE is a compact design that results in a lighter weight winch compared to conventional gearing. Planetary gearing also provides a high peak load capacity.

FLANGE STYLE ROLLER BEARINGS are self-aligning with cast housings to maintain smooth drum rotation.

4HBP SERIES

capacity up to 100,000 lbs

	Load Rating	Line Speed
4HBP Series	35,000 - 100,000 lbs	up to 70 fpm

Shown with double compartment drum modification.

OPTIONS AND ACCESSORIES

DRUM MODIFICATIONS (A) include grooved drums, multiple compartment drums and modified drum widths and diameters.

WINCH MOUNTING OPTIONS include base, wall or under hung installation.

CABLE PRESSURE BARS (B) help maintain uniform winding of wire rope.

LIMIT SWITCHES (C) provide secondary shut-off for load travel in one or two directions.

MOTOR OPTIONS include air or hydraulic, voltage or phase changes, IP 55 or IP65, Class H insulated and multi-speed operation.

DUTY RATINGS include IEEE 45 marine duty, tropical duty, severe duty and explosion proof ratings.

BRAKE OPTIONS include over-speed, caliper style, band, and more.

CONTROLS (D) are available in a wide range of standard and custom configurations for single or variable speed.

CORROSION RESISTANT FINISHES for harsh or hazardous environments.

MANUAL OVERRIDES for winch operation in power loss situations.

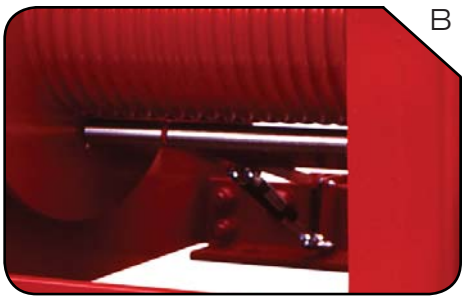

Shown with cable pressure bar and grooved drum modification.

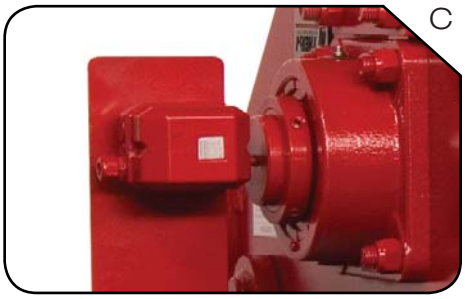

Shown with RLS option.

Standard control option.

CUSTOM APPLICATIONS

TUG BOAT TOW WINCH OIL REFINERY DOCKING TERMINAL

PROBLEM
to tow large vessels into port during docking operations.

SOLUTION
large capacity winch designed for heavy load handling in saltwater environment.

PRODUCT FEATURES
- Load Rating: 50,000 lb
- Line Speed: 25 fpm
- Travel Distance: 1,500 ft
- Power: 408 VAC, 3 Phase
- Large capacity drum to accommodate long travel distances.
- Stainless steel level wind for uniform spooling of cable onto drum.
- Double disc brake for additional static load holding capacity.
- Epoxy finish for corrosion resistance in marine environment.
- ABS design compliance

TOWED ARRAY SLIP RING WINCH FOREIGN NAVY

PROBLEM
deploying and retrieving underwater sensor equipment.

SOLUTION
custom winch fitted with slip ring and level wind to receive feedback.

PRODUCT FEATURES
- Load Rating: 3,000 lb
- Line Speed: 190 fpm
- Travel Distance: 1,300 ft
- Power: 440 VAC, 3 phase
- Slip ring to receive electronic feedback from towed array.
- Level wind to ensure uniform spooling of cable.
- Variable speed drive for precise control of load.
- Large diameter drum for faster line speeds.
- Epoxy finish for corrosion resistance in saltwater environment.

ANNEALING FURNACE DOOR WINCH FLAT ROLLED STEEL MILL

PROBLEM
to simultaneously lift multiple doors on furnace during the annealing process.

SOLUTION
single drum winch system to lift different sized doors in unison.

PRODUCT FEATURES
- Load Rating: 2,000 lb
- Line Speed: 28 fpm and 56 fpm
- Travel Distance: 14 ft and 6 ft
- Power: 460 VAC, 3 phase
- 4-drum compartments with different diameters for different line speeds.
- Grooved drums with pressure roller bars for uniform winding of wire rope.
- Extended drum with two compartments at each end to separate cable center lines.
- Drum guard to help prevent injury.
- Slack line detector to prevent shock load if doors jam while lowering.
- Rotary and paddle style limit switches to provide automatic shut off with overtravel protection.

SCREEN RAKE LIFTING WINCH METROPOLITAN WATER DISTRICT

PROBLEM
to lift screen rakes out of water canal for removal of debris.

SOLUTION
electric winch system with two part rigging and custom bolt hole pattern to meet existing requirements.

PRODUCT FEATURES
- Load Rating: 9,000 lb to deliver 18,000 lb with two-part rigging
- Line Speed: 10 fpm
- Travel Distance: 17 ft
- Power: 460 VAC, 3 Phase
- Narrow drum to accommodate short fleet angle distance.
- Epoxy finish for durability in corrosive environment.

CONVEYOR MAINTENANCE WINCH COAL MINE IN WYOMING

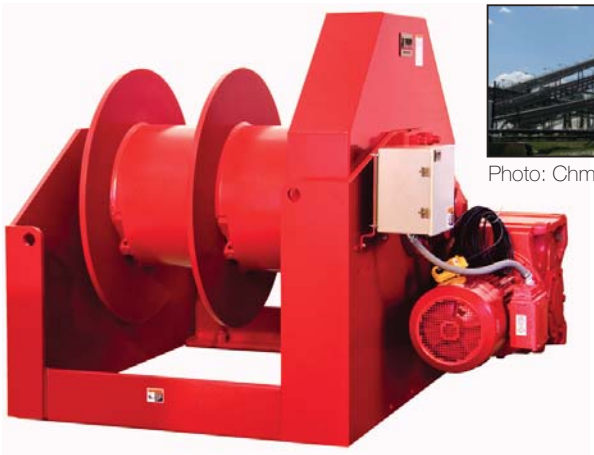

Photo: Chmee

PROBLEM
to lift a 50 ton conveyor counterweight in gravity take up tower during routine conveyor maintenance.

SOLUTION
winch mounted at top of tower with two separate two-part rigging lines to load.

PRODUCT FEATURES
- Load Rating: 56,000 lb to deliver 100,000 lb with two-part rigging
- Line Speed: 18 fpm
- Travel Distance: 50 ft
- Power: 460 VAC, 3 phase
- Dual compartment drum for two lift lines.
- Controls with pendant for remote operation.

RAIL CAR PULLING WINCH SHIP UNLOADING TERMINAL IN CHILE

Photo: Chris McKenna

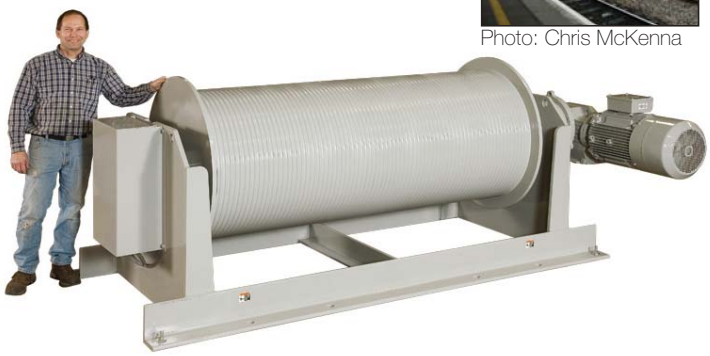

PROBLEM
to position up to ten railcars during loading and unloading process.

SOLUTION
closed loop, single winch system to move large loads in two directions.

PRODUCT FEATURES
- Load Rating: 30,000 lb
- Line Speed: 40 fpm
- Travel Distance: 625 ft
- Power: 380 VAC, 3 phase, 50 hertz.
- Extended grooved drum for single layer wrapping and uniform
- speed.
- Chain driven rotary limit switch to limit travel in both directions. Epoxy gray finish for improved corrosion resistance in marine environment.

CUSTOM APPLICATIONS

SUBMERGED LID LIFTING WINCH NUCLEAR POWER PLANT

Photo: Simone Ramella

PROBLEM
to raise hinged lids during removal of fuel rods from cylinders in a cooling pool.

SOLUTION
overhead mounted winch to provide smooth lifting control.

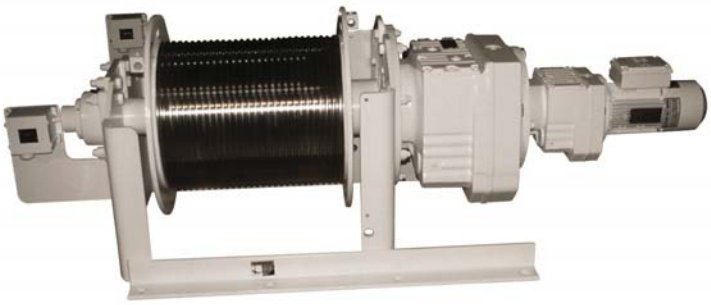

PRODUCT FEATURES
- Load Rating: 4,000 lb
- Line Speed: 10 fpm
- Travel Distance: 8 ft
- Power: 460 VAC, 3 phase
- Variable speed controls for smooth operation and overload protection.
- Stainless steel drum and white epoxy finish for corrosion resistance.
- Rotary limit switch to limit travel in both directions.
- Grooved drum for uniform winding of wire rope.

LAUNCH WAY RETRIEVAL WINCH BARGE MANUFACTURER

Photo: Alexander Solch

PROBLEM
to pull barges into position during production at ship building and repair facility.

SOLUTION
large capacity winch system to move barges.

PRODUCT FEATURES
- Load Rating: 20,000 lb
- Line Speed: 54 fpm
- Travel Distance: 600 ft
- Power: 460 VAC, 3 phase
- Manual clutch to disengage drum for quick payout of unloaded cable.
- Level wind to accommodate short fleet angle distances.

DREDGE POSITIONING WINCHES COUNTY WATER DISTRICT

PROBLEM
economical continuous back and forth positioning of floating dredges in water settling basin.

SOLUTION
multiple winch systems operating simultaneously from different locations around the basin.

PRODUCT FEATURES
- Load Rating: 12,000 lb
- Line Speed: 15 fpm
- Travel Distance: 1,600 ft
- Power: 460 VAC, 3 phase
- Drum guard to help prevent injury.
- Programmable computerized variable speed controls for automatic operation.
- Extended length drum with single layer wrapping for uniform tensioning.

CASCADING CHUTE POSITIONING WINCH BULK HANDLING FACILITY

PROBLEM
to vertically position cascading load out chute during barge loading process.

SOLUTION
winch system with two lift lines for controlled positioning of chute.

PRODUCT FEATURES
- Load Rating: 9,800 lb
- Line Speed: 15 fpm
- Travel Distance: 40 ft
- Power: 460 VAC, 3 phase
- Grooved drum for uniform spooling of wire rope.
- Non-standard drum length to increase cable capacity.
- Rotary limit switch to limit travel in both directions.
- Two cable anchors to accommodate two lift lines.
- Custom color epoxy finish to meet customer's safety specifications.

ACCOMMODATION LADDER WINCH SERVICE VESSEL OPERATOR

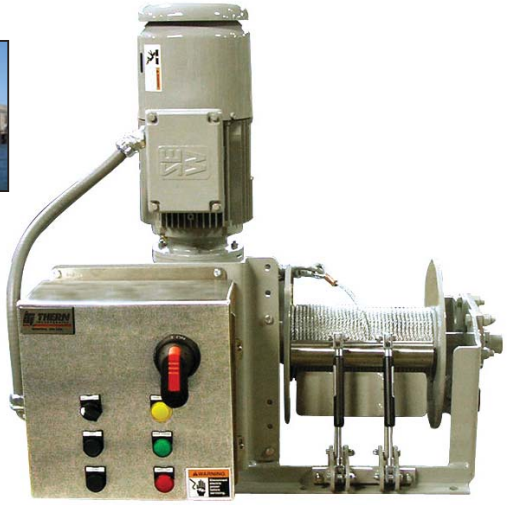

PROBLEM
to raise and lower service vessel accommodation ladder during boarding and disembarking.

SOLUTION
small, conveniently located winch for controlled positioning of ladder.

PRODUCT FEATURES
- Load Rating: 1,500 lb
- Line Speed: 65 fpm
- Travel Distance: 65 ft
- Power: 460 VAC, 3 phase
- Pressure roller bar for uniform winding of wire rope.
- Stainless steel control enclosure and epoxy finish for corrosion resistance in marine environment.

ORBITER DOOR POSITIONING WINCH AEROSPACE COMPANY

PROBLEM
to open and close large steel orbiter door at launch platform during pre-launch operations.

SOLUTION
closed loop winch system to pull protective door in front of orbiter.

PRODUCT FEATURES
- Load Rating: 65,000 lb
- Line Speed: 13 fpm
- Travel Distance: 63 ft
- Power: 460 VAC, 3 phase
- Single drum with two cable anchors for closed loop operation.
- Grooved drum for uniform winding of cable.
- Rotary limit switch to limit travel in both directions.
- Yellow epoxy finish provides protection in harsh environment.
- Variable speed controls with encoder for accurate positioning and soft starting and stopping.